Instruction manual for packaging, transportation, handling, installation, storage, and maintenance of Pad mounted-type transformers, switchgear boxes, and junction boxes

Content

1. Safety and risks

Please read this instruction manual carefully before servicing the product, disregarding the instructions may result in property damage, serious injury, or death.

The product covered in this manual must be operated only by qualified personnel.

This manual contains important information for the safety of personnel and the product.

If any problem not covered in this manual occurs, contact MAGNETRON S.A.S.

When working with transformers, operators are exposed to a series of risks and dangers, it is very important to know them in order to eliminate or minimize situations or conditions that may cause damage.

1.1 Personal security

- Stop any activity if working conditions are unsafe.
- All team members must know the instructions in this manual, the safety practices established in the workplace and the applicable legislation.
- Use clothing and personal protection elements according to the work to be carried out.

  - ✓ Long-sleeved cotton shirt.
  - ✓ Dielectric safety boots.
  - ✓ Bait or dielectric gloves.
  - ✓ Latex gloves (taking samples of the insulating liquid).
  - ✓ Latex gloves (handling tools).
  - ✓ Safety glasses.
  - ✓ Dark glasses for sun protection (field activities).
  - ✓ Helmet.
  - ✓ Avoid wearing loose clothing.
  - ✓ Do not wear rings, watches, chains, earrings or any personal item that could cause harm.
  - ✓ Do not wear tennis shoes, shorts, short-sleeved shirts, and headphones.

1.2 Types of risks

➢ **Physical risks**

It refers to all environmental factors that depend on the physical properties of the bodies and that act on the tissues and organs of the worker's body, can produce harmful effects according

to their intensity and exposure time.

They are related to the imminent probability of suffering bodily harm with or without direct contact, they can be classified as labor or environmental.

They are the most common and dangerous conditions at work:

- ✓ Noises,
- ✓ Lightning,
- ✓ Temperature,
- ✓ Humidity,
- ✓ Radiations,
- ✓ Vibrations,
- ✓ Electricity.

Listed below are some activities that must be carried out:

- Install localized lighting in those jobs that require it, when general lighting is moderate and may be insufficient.
- Avoid dead flow areas (where air does not circulate).
- Use work equipment that generates low noise levels.
- Locate noisy equipment or sources out of the way, if possible.
- Reduce the exposure time.
- Establish a shift site rotation system.
- Use protective screens or shielding for radioactive sources.
- Apply the 5 golden rules when working with energy.

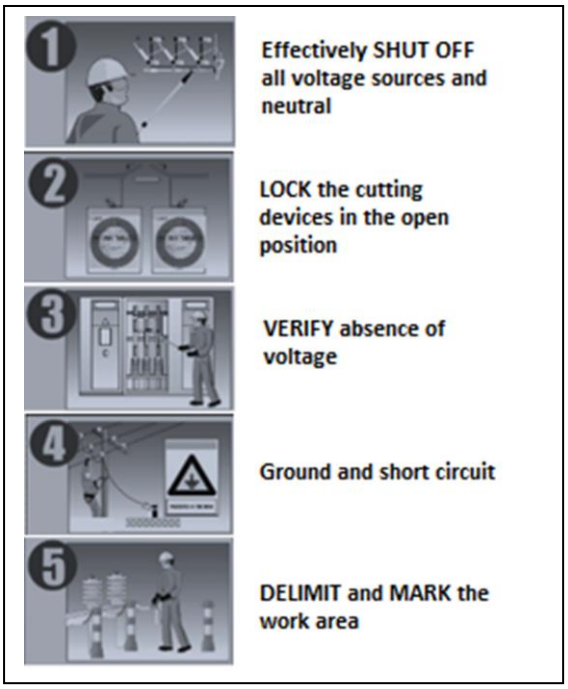

Figure 1: 5 golden rules

➢ Mechanical risks

They are associated with the set of physical factors that can give rise to an injury due to the mechanical action of machine elements, tools, work pieces or projected, solid or fluid materials.

The mechanical risk can occur in any operation that involves manipulation of hand tools, machinery, handling of vehicles, use of lifting devices, such as.

- ✓ collision with moving or stationary objects,
- ✓ Hits,

- ✓ Cuts,
- ✓ Entrapments due to overturning of machines or vehicles,
- ✓ Entrapments by or between objects,
- ✓ Projection of fragments or particles,
- ✓ Falling objects being handled.

Listed below are some activities that must be carried out:

- Train workers in preventive matters, both in theoretically and practically related to the work equipment necessary for their job.

- Guarantee the conditions and correct way of using machinery, based on the manufacturer's instructions.

- Promote the consultation and participation of workers in aspects related to mechanical risks.

- Guarantee periodic monitoring of the health status of workers.

- In the event of accidents or occupational diseases due to mechanical risks, the necessary corrective measures must be investigated and applied so that it does not happen again.

Figure 2: Signs of mechanical risk

2. Introduction

Read carefully and comply with the indications given in this manual before any intervention on the product, failure to comply with them invalidates the guarantee.

The electrical transformer is a noble, simple and safe electrical device that has accompanied us in daily life since the beginning of electrical engineering, faithfully fulfilling its mission of transforming electrical parameters.

The insulating liquid immersed electrical transformer is designed to reduce the distribution line voltage to voltages that can be handled with a low risk to end users.

Its useful life depends, among other reasons, on the following:

- Manufacturing design,
- Supply voltage,
- The connected load,
- The protections used,
- The level of the insulating liquid,
- The maintenance received.

Pad mounted-type transformers are used as part of underground distribution systems, suitable for residential applications, tourist sites, hotels, buildings, among others; Therefore, they have sealed safety compartments for both medium and low voltage, which makes their operation safe, preventing possible accidents.

This kind is an electrical transformer inside a cabinet, its location is generally done outdoors, on a typically concrete base, with dead-front medium voltage terminals and doors with locks.

The use of this type of transformers presents a wide variety of advantages:

- They require less space
- They are safer
- Easy access to the system,
- Better protections,
- Elimination of visual contamination,
- Its maintenance is minimal
- vandal proof,
- They constitute a very complete substation.

Today, the use of the transformer plays a very important role in the electrical supply. A failure in its operation can generate enormous inconveniences for companies, the industry or the population, since everyone uses the electrical service equally in their daily activities.

The information, recommendations, descriptions and safety notes compiled in this document are based on guides, standards and the experience of MAGNETRON SAS

This information does not include or cover all contingencies, therefore, if you require more information, contact MAGNETRON S.A.S.

3. Definitions

3.1 Transformer

Electrical device without moving parts that transforms electrical energy into its two main factors: Voltage and Current.

3.2 Primary winding

Winding that is connected to a power source.

3.3 Secondary winding

Winding to which a load is connected.

3.4 Medium voltage winding

Winding with the highest voltage.

3.5 Low voltage winding

Winding with the lowest voltage.

3.6 Packaging

Cover normally made of wood in which transformers are packed during storage and transport.

3.7 Packing basis

Flat and strong structure manufactured usually in wood that serves to protect and support the weight of the product.

3.8 Danger

Inherent situation with the capacity to cause injury or damage to people's health.

3.9 Risk

Combination of the probability that a dangerous event will occur with the seriousness of the injuries or damage to health that such an event can cause.

3.10 Radial type pad-mounted

Also known as end of line, because it does not allow the continuation of the power supply through it.

In this type of configuration, the transformer is powered by a single source. This indicates that, if the power in the supply line is interrupted, the transformer cannot be energized until the fault that caused the cut is corrected.

3.11 Loop feed type pad mounted

In this arrangement, there are six primary power terminals, with a four (4) position disconnector or a combination of two (2) two-position disconnectors, arranged in such a way as to allow the primary network to continue without interruption feeding similar transformers or other types of loads, even when the transformer is out of operation.

Another characteristic of this type of transformers is that they can be powered by two (2) different power sources. In this case, if one power source is interrupted, the other power source can be used, ensuring that the interconnected transformer(s) will always be energized and operating.

3.12 Switchgear box

Dead front sectioning equipment, made up of medium voltage elastomeric connectors and disconnectors immersed in insulating liquid.

They are normally used in underground distribution networks and are installed on a concrete base (pedestal).

The control boxes allow the sectioning of electrical circuits under load. Among its main features are:

- They behave like a substation,
- Minimizes service interruption times, as it allows loads to be transferred from one circuit to another,
- Lower cost of civil works,
- Low visual impact.

3.13 Junction Box

It is used to branch the circuits, as a connection jumper.

The junction box is made up of elastomeric pre-molded elements, loadbreak junction and elbow type connectors.

It does not allow sectioning the circuits and does not contain insulating liquid.

3.14 Dead front

They are those devices that do not have live parts exposed in the medium voltage compartment, being the product energized.

4. Abbreviations

TO	Amps
AGD	Dissolved gas analysis (DGA)
ANSI	American National Standards Institute
ASTM	American Society for Testing and Materials
MV	Medium voltage
LV	Low voltage
DPS	Device for surges (lightning rod), source arresters
kg	Kilogram
kV	Kilovolt
kVA	kilo volt amps
lbf.ft	pound-force foot
m	Meter
max	Maximum
min	Minimum
mΩ	milliohms
MΩ	megohms
more	milliseconds
ntc	Colombian technical standard
PCB's	PCBs
PRM	pad-mounted radial
PMM	Pad-mounted mesh or ring
Pn	Neutral point
psi	Pounds per square inch
PTS	Grounding system
Grd	Grounding
TTR	Transformer turns ratio
VSP	Overpressure valve

5. Handling

Caution: The transformer must be handled in a vertical position.

Keep the product on the base (wood or metal) on which it is dispatched to the place where it will be installed, since it provides greater protection.

Also, it can be kept on the casters or in the crate (if it has one).

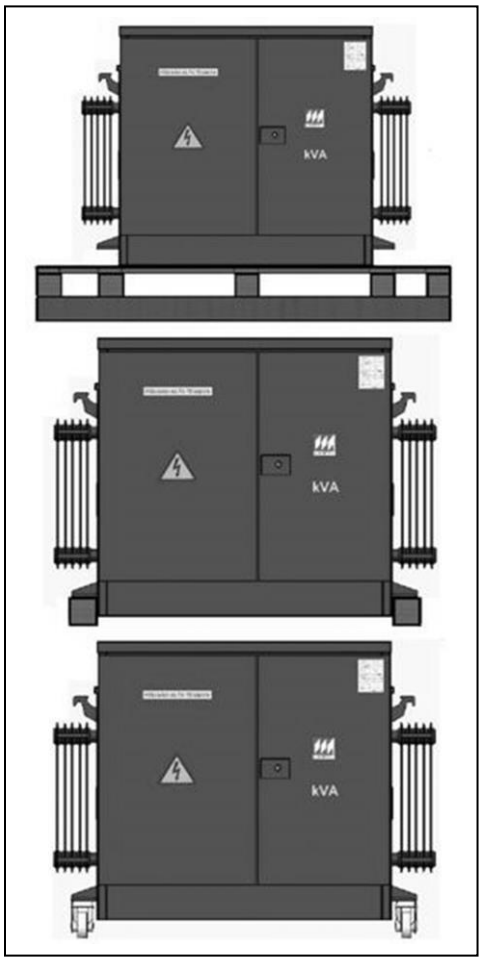

Figure 3: Three-phase pad mounted on the base or on casters

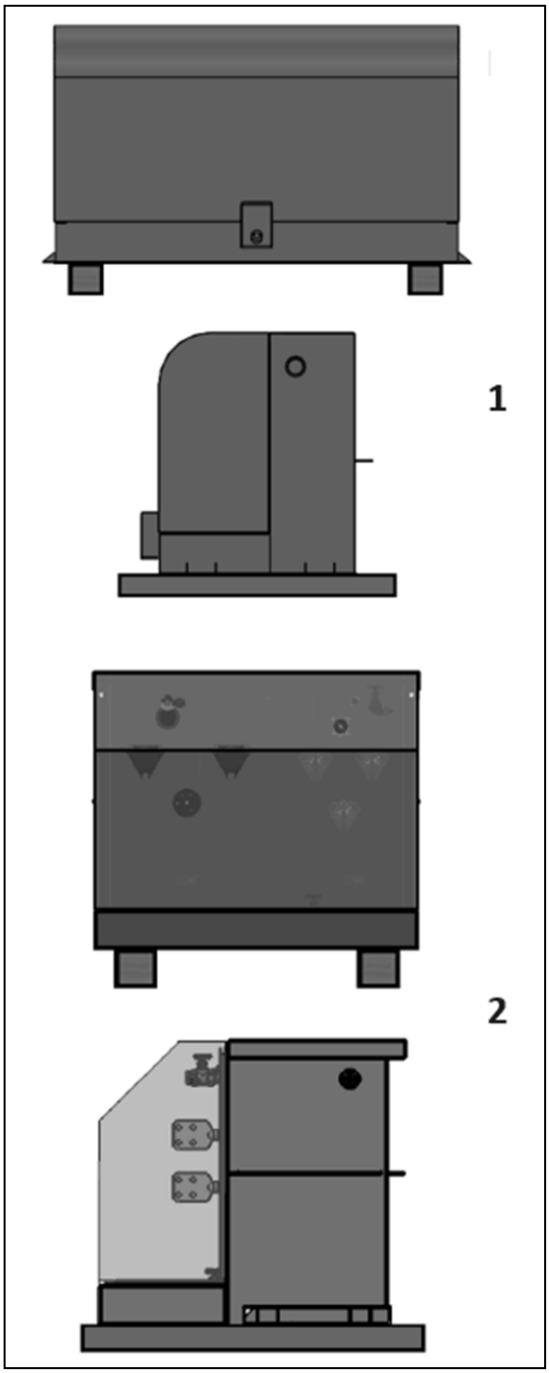

Figure 4: Single phase junction box and pad mounted on base

Do not for any reason allow the product If it is dragged directly on the floor, the tank or cabinet may be deformed or the paint may deteriorate, resulting in the oxidation of the sheet metal.

The product must only be lifted using the lifting lugs. To transport it, use forklift or crane.

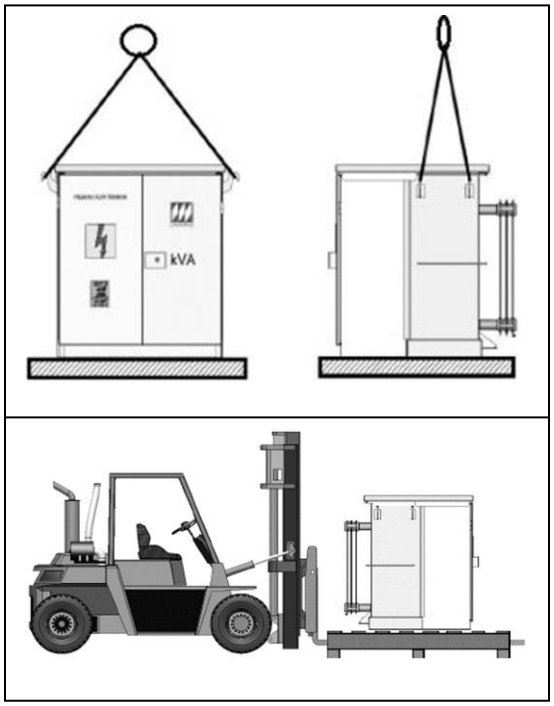

Figure 5: Handling of the product

Do not lift or move the product placing crowbars or jacks under fixtures, connections, radiators, or other devices; these elements are not designed to be subjected to this type of stress and may introduce ruptures or deformations causing leak of the insulating liquid.

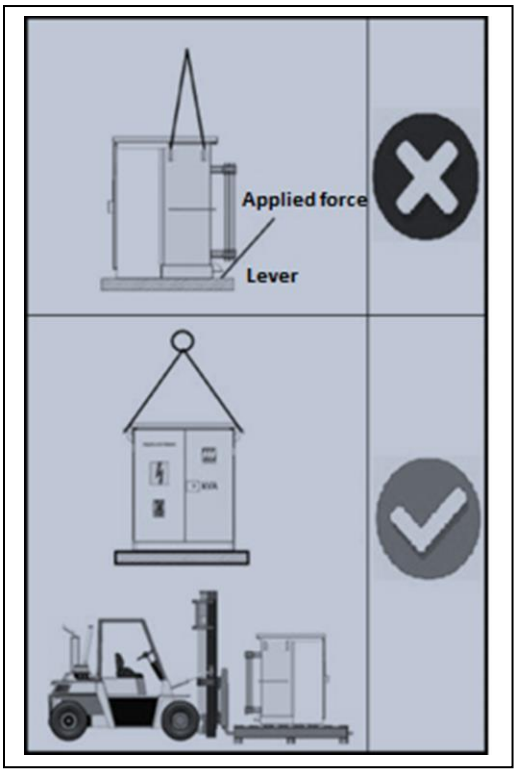

Figure 6: Handling of the product.

If it is not possible to use a crane, differential, forklift or stowage carrier, you can slide the product on rollers or skates. For this purpose, use the base of the product since it is designed to slide it in both directions, parallel to its axes.

Use rollers or skates according to the weight of the product and in sufficient quantity to distribute its weight.

Don't let it tip over (it may tip over); besides, be careful not to damage the base and put pressure on the cabinet.

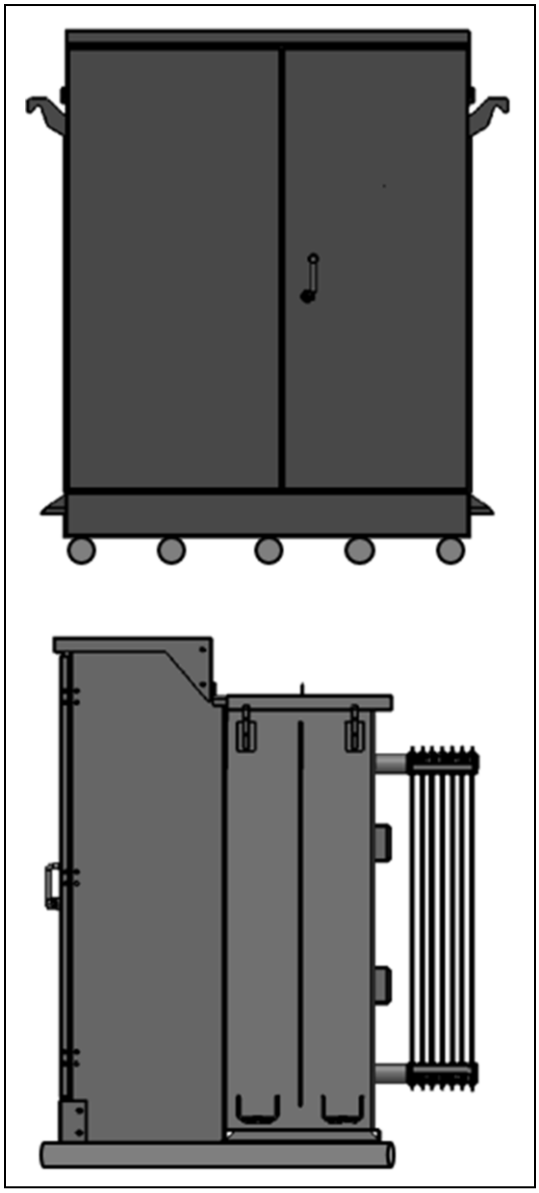

Figure 7: Use of skates

The product provided with lifting devices or lifting lugs that are used to handling it with a crane, fiber slings should be used to protect the paint.

If you use strings or metal slings, be sure to cover the parts in contact to avoid paint detachment.

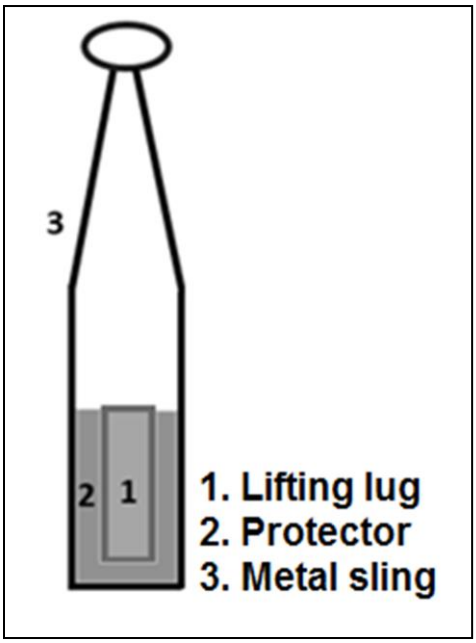

Figure 8: Paint protection on the lifting lugs

Do not use the lift lugs to carry the product, these devices are only designed to lift.

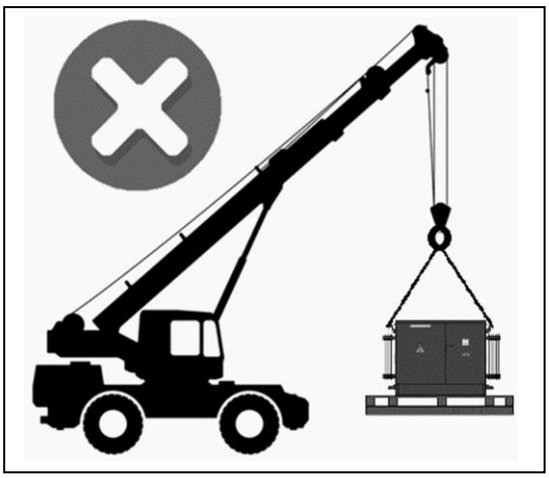

Figure 9: Prohibited from transporting the transformer from the lifting lugs

6. Packaging

The packing of the product It must allow handling in such a way that, when any movement is required for its storage or transport, it is easy to lift it by the base of the packaging.

The base of the packaging must have a minimum height of 10 cm to allow the entry of a forklift or a pallet rack.

The product that must be lifted or transported with a crane (by weight or size) and that it is clad, it must be guaranteed that the lifting lugs remain free and easily accessible for the location of the slings.

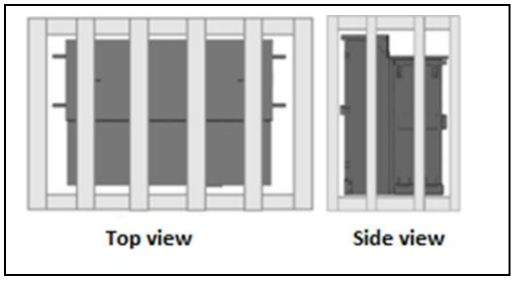

Figure 10: Visible rear lifting lugs

The product it must be attached to the base of the packaging to prevent it from suffering deterioration caused by sudden movements. The coupling can be done through straps or by means of screws.

In pad-mounted transformers, the control boxes and the junction boxes, the coupling is done through screws.

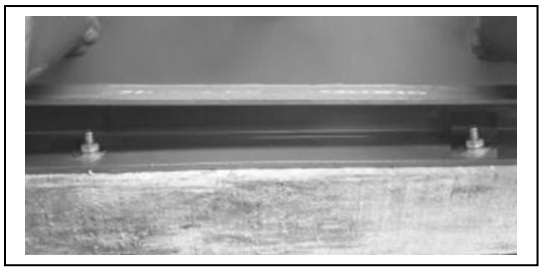

Figure 11: Coupling with screws from product to the base

In this type of products, the nameplate is located inside of the cabinet, making it difficult to access when it is shipped packed.

For its identification, locate the serial number attached to the cabinet cover in the upper right part of the front, you can also check the kVA (if applicable) on the same front.

The location of the sticker with the serial number may vary depending on the configuration of the product.

Figure 12: Serial Number Sticker

7. Transport

Take into account the weight of the product to determine the appropriate lifting and/or transport elements, this information is provided on the nameplate, in the test certificate or in the documents required for transport.

Lift the product using the lifting lugs or the base of the packaging.

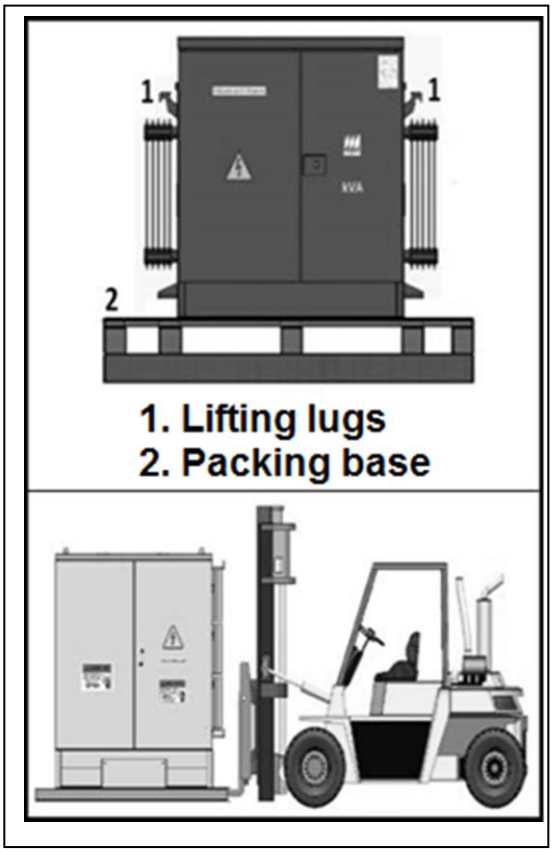

Figure 13: Parts to lift the product.

By raising the product of the lifting lugs, be sure not to rub or touch any component (fixtures, cabinet, etc.) with the slings.

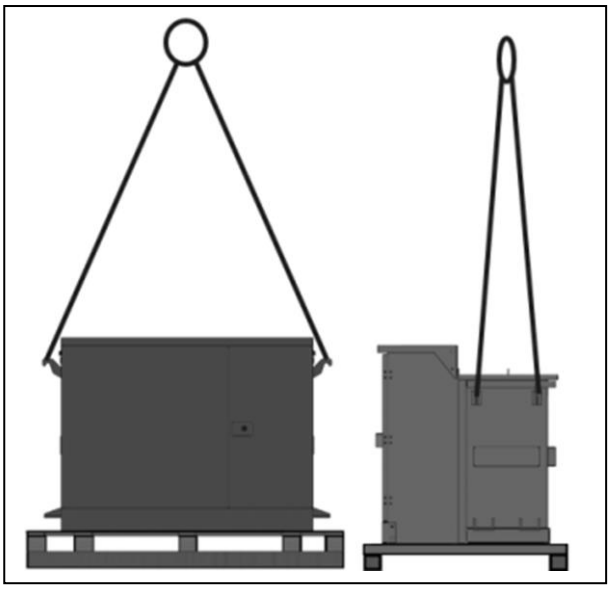

Figure 14: Elevation of the product from the lifting lugs

7.1 Load distribution:

7.1.1 Products without crate

Due to their size, junction boxes and transformers pad mounted type must be loaded in the central part of the truck, with this, it is guaranteed that the load is balanced.

These products are secured to the truck by slinging them between the lifting lugs and the truck body.

The junction boxes, being smaller, can be distributed inside the truck to optimize the load.

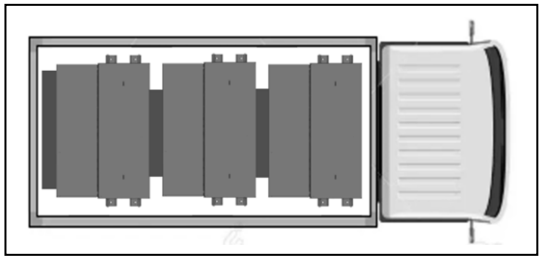

Figure 15: Loading and use of wedges

Figure 16: Example to secure the product with slings

The base of the product acts as a separator, when there are spaces between them, wooden wedges must be fixed between them and the floor.

The function of the wooden wedges is to prevent movement of the product when the transport is in motion.

When few units are charged due to the size of the product, please note the following:

- The load must be placed centered on the base of the truck or container.
- If the product has radiators, load them interleaved in the truck or container, this ensures that the load is balanced.
- When the base of the product and the floor of the truck are metallic, wooden boards must be located between them to avoid displacements.

  Furthermore, if the base of the product It is metallic, it must also be tied to the truck body.

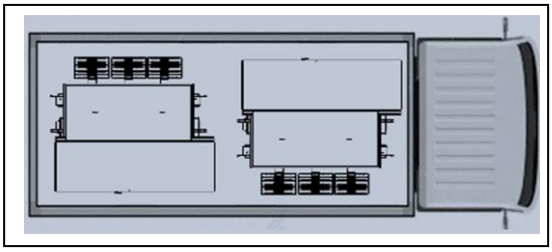

Figure 17: Intercalated radiators to balance the load

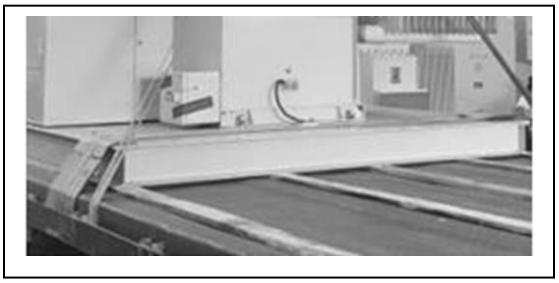

Figure 18: Wooden boards between the metal base of the product and the metal floor of the truck

7.1.2 Products with crate

These products are loaded and transported following the same considerations of the products without crate. However, the following observations are made:

- The packaging (base and crate) of the product acts as a separator, when there are spaces between them, wooden wedges must be set between them and the floor.

- Only the junction boxes and the pad-mounted transformers single-phase can be loaded on up to two levels, as long as the weight of the load located on the second level does not exceed 400 kg.

  Additionally, each set must be tied together to form a solid unit and between them to the walls of the truck or container (figure 19).

- The lashing of the cargo to the body of the truck or container can be done in several ways:

  - Passing the sling over the crate.

  - Passing the sling over the lid and cabinet of the product.

  - Passing the sling over the lifting lugs of the product.

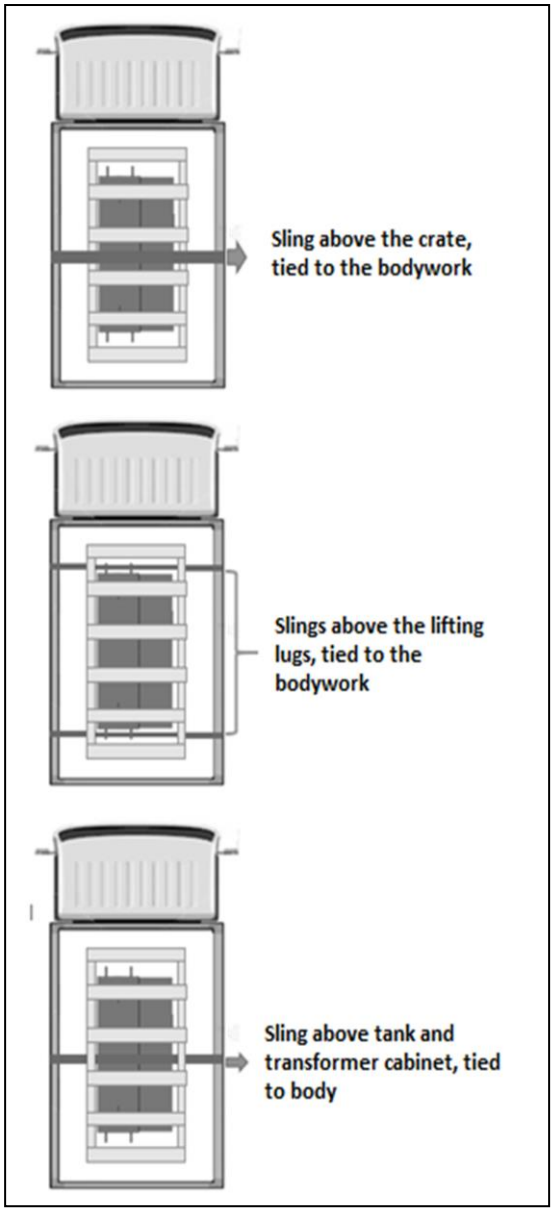

Figure 19: Ways of tying the load to truck or container

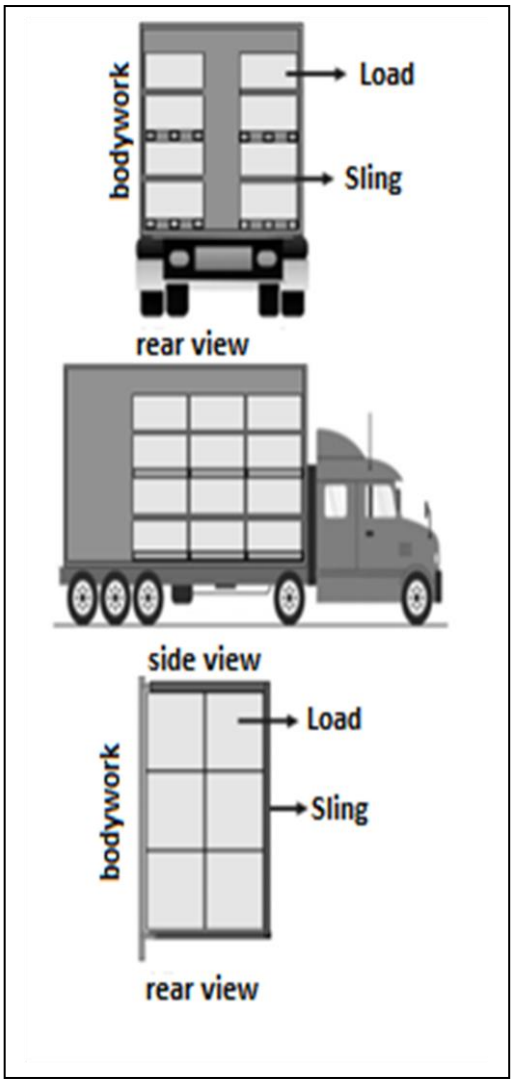

Figure 20: Correct way to load and tie down the product

7.1.3 Load open top trucks

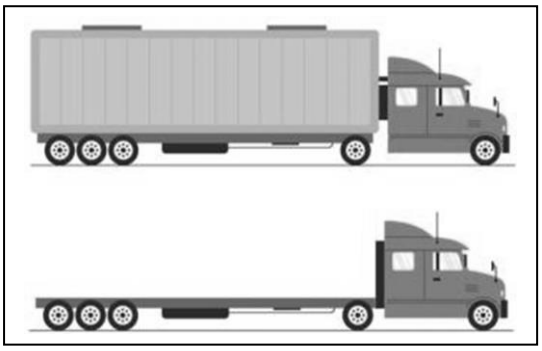

Figure 21: Normal and open top truck

This type of loading is done at the request of the client or due to the dimensions of the product to be transported.

Loading on this type of truck has several advantages:

- By not having the tent, the rod and the sides, better use is made of the total available area of the plate.
- Apply for the product with or without crate.
- The load can protrude +/- 15 cm at the sides from the iron

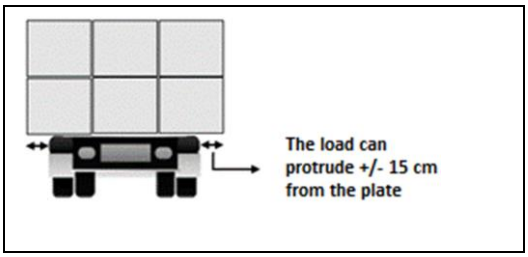

Figure 22: Load tolerance on the sides of the plate

- The total number of products in charge.

- The loading and unloading is done by the sides of the truck, reducing the time of these operations.

- Loading products (pad mounted single phase and junction boxes) can be stacked up to two levels, as long as the weight of the product of the second level does not exceed 400 kg.

Caution: For Colombia, the total height of the load measured from the floor cannot exceed 4.3 m.

The total weight of the load cannot exceed the capacity of the truck.

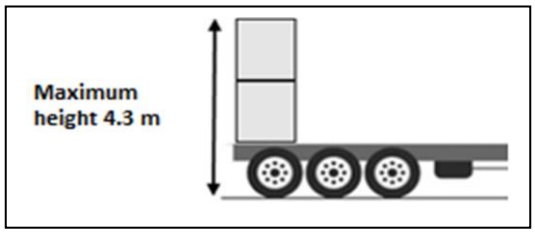

Figure 23: Maximum height of the load

➢ **Steps for loading**

- Loading must be done from the front of the plate (near the cabin) to the back of it.

- With the help of the appropriate mechanical means (forklift, crane, etc.) load the first product, it should be centered on the truck bed.

- Repeat the previous numeral until completing the total load of the truck.

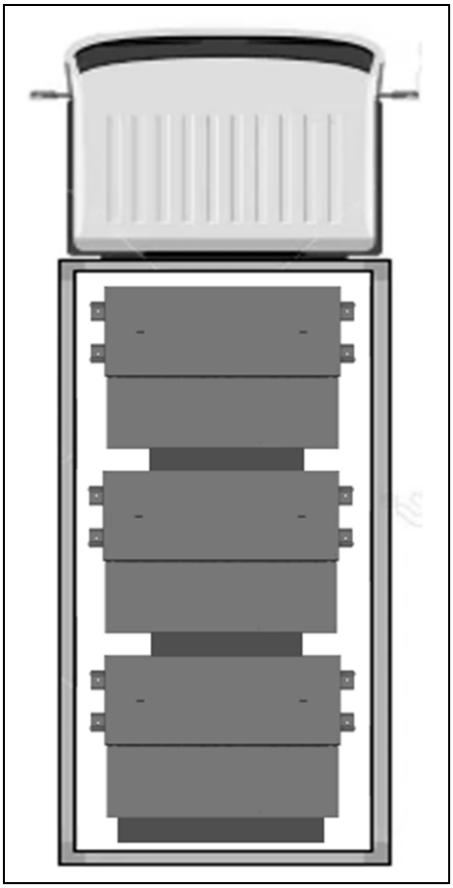

Figure 24: Total truck load

- All loaded products must be slinged to the truck body.

- To prevent shifting of the load during transport, sling the last product loaded.

Figure 25: Mooring last row loaded

Precautions: All rows must be secured with slings, they must be well tensioned.

If you use strings or metal slings to lift the transformer, be sure to cover the parts in contact to avoid paint detachment.

7.1.4 Open top loading unit (container without roof)

For loading this type of container, take into account the next:

- Use bridge crane (differential) or crane.
- When lifting the load, do so only until it exceeds the height of the container (lifting it much more can cause accidents).
- Be sure not to hit the charging unit.
- The cargo cannot stick to the container walls.
- Check the condition of the slings, straps or shackles, do not use them if they show damage or deterioration.

Figure 26: Load open top container

7.1.5 Download

Precautions: Some transformers have accessories that lift the lid, NEVER use them to lift the product.

If you use strings or metal slings to raise the product, be sure to cover the parts in contact to avoid paint

The download of the product is paid by the customer, unless otherwise specified in the contract. However, the following should be noted:

If you have doubts about the gross weight of the product, the lifting elements to be used, the method to unload the product or any other activity, refrain from maneuvering and contact MAGNETRON S.A.S.

- Always use the appropriate mechanical equipment, forklift, crane, etc.
- The mechanical equipment used must have at least twice the capacity of the weight of the product.
- Lift the product only by the lifting lugs or by the base of the packaging.
- Personnel involved in the unloading must remain away from the product when it is lifted.
- The product loaded in open-top trucks must be unloaded in opposite way to loading.
- In containers or trucks with close container, the products that are out of reach must be pulled until they are in the unloading position, to do so:
    - Attach a sling to the hoist or mechanical means used and pass it around the base of the product packaging.
    - Pull the product until it is within reach.
    - Download the product.

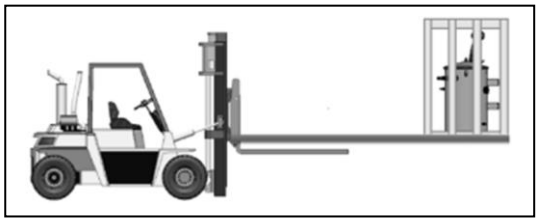

Figure 27: Proper way of pulling the product in the download.

Precautions: the product must not be moved dragging the tank.

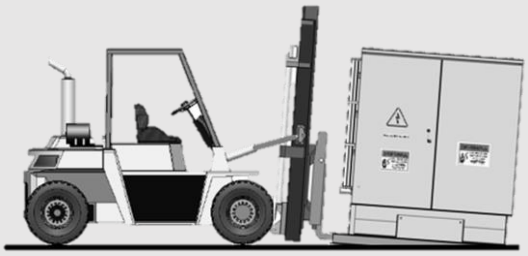

8. Reception

Caution: Before downloading, the product should visually inspect of the state of the same, any abnormality communicates it to the transporter and leave a record of it.

The products covered in this manual are factory tested according to standards, are delivered fully assembled and ready for installation, however, considering the difficulties encountered during transportation, the following should be noted:

- Check that the security seals located between the lid and the tank for the product have not been removed or show evidence of having been tampered with.

Figure 28: Seal of security cover-tank

- Check that the security seals located in places that have removable parts (junction boxes, hand holes, bolted covers, etc.) for the export-type product, have not been removed or show evidence of having been tampered with.

Figure 29: Security seal on removable parts

- Check the status of well type bushings, insert type bushings and low voltage insulators must not be loose or present damage.

- Check the state of the tank, it should not show bumps, cracks or damage to its paint.

- Check the status of the other accessories that are part of the product (overpressure valve, source arrestors, switch, disconnector, etc.).

- Check for leaks of insulating liquid.

- Inspect the base (wood or metal) should not show damage.

- Check that the characteristics of the product correspond to what was requested (power, phases, voltages, serial number, etc.).

- In case of finding damage to the product, if possible, leave a photographic record of the findings.

- Inform the transporter the anomalies found.

- Contact MAGNETRON SAS and notify what happened, supplying the complete information of the product.

- With the product, if you carry them, the casters, elbows and the key of the cabinet must arrive.

Figure 30: Caster wheels

- Keep in mind what is established in numeral 7 "Transportation" before unloading the product.

9. Storage

Caution: Keep the product in the packaging (base or crate), this protects it from damage or deterioration during storage.

Caution: To prevent the ingress of moisture into the product, the overpressure valve MUST NOT be actuated for any reason.

If the product does not require immediate installation, comply with the following instructions to ensure its good condition:

- Store it indoors.

  Note: If storage is done outdoors, keep in mind that environmental conditions can deteriorate the base or crate, thereby causing damage or deterioration of the product.

- Do not store it in places where there is presence of moisture, sludge, corrosive gases or explosive atmospheres.

- The storage of product It depends on your size and your packing, if the product is dressed and weighs 400 kg or less, you can placed on two levels (one above the other) at most.

  Note: If storage is done outdoors, they cannot be placed on two levels (one above the other).

- The product with a weight greater than 400 kg must be stored by units.

- Do not store the product on two levels (one above the other) when storage is longer than six (6) months.

- When storage is extended for more than six (6) months, has to periodically inspect the state of the base or crate.

10. Basic accessories

The accessories described in this numeral obey the basic accessories that are part of the pad-mounted transformer, switchgear boxes and junction boxes; however, reference is made to some protection or control accessories.

Also, it is worth clarifying, there are many references for each type of accessory, only reference is made to the accessory as such.

Caution: If any accessory is not covered in this manual or requires more information, contact MAGNETRON SAS

10.1 Well bushing

This is an element with a cavity to insert another component, for example, the bushing insert.

Its function is to serve as an interface between the active part of the transformer and the accessories with which the connection to the system will be made.

The well bushing is installed in the product.

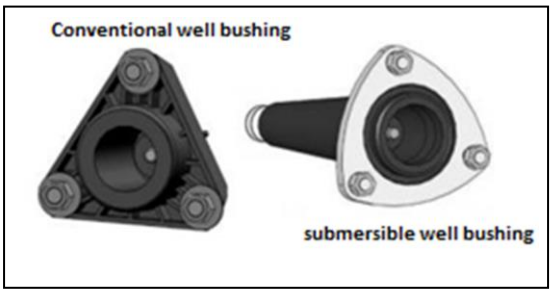

Figure 31: Well bushing

10.2 Insert bushing

This connector installs inside the well bushing and matches with elbow terminals or other accessories.

The insert bushing allows for a fully insulated connection for operation under load, and its construction makes it easy to install and replace in the field.

The insert bushing comes single and double.

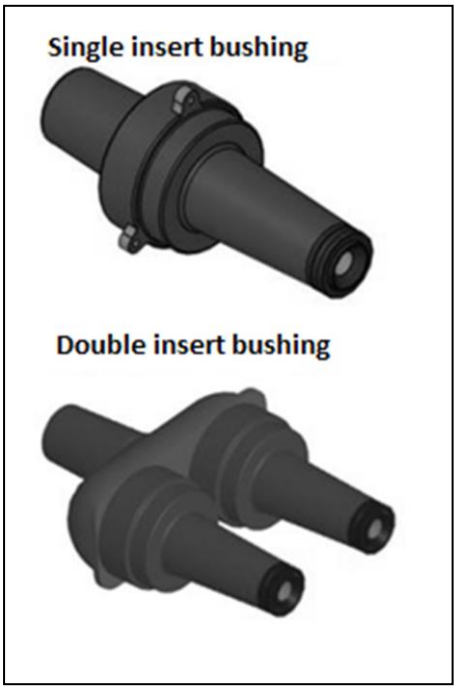

Figure 32: Insert bushing

➢ **Insert bushing installation**

- Remove the protective cover from the insert bushing and the well bushing.

- With a clean, dry cloth, remove any debris from the insert bushing and well bushing.
- Evenly apply silicone lubricant (included) to the insert bushing and well bushing cavity.

- Locate the insert bushing in the bore bushing and tighten using one of the following methods:

  ✓ If installing using a torque tool, tighten to 15 lb-ft.

  ✓ If a torque tool is not used, manually turn the insert clockwise until the insert bottoms out in the well bushing (about 7 to 7-1/2 turns).

- Replace the insert bushing protective cover.

The double insert bushing facilitates the connection of the elbow that energizes the transformer and the source arrester (SPD) that protects the transformer.

10.3 Integral bushing

This item sums up the well bushing and insert. It is used to connect the cables of MT to the terminals of the primary winding of the transformer, by means of the elbows.

They are designed to operate submerged in oil, delivered installed in the product.

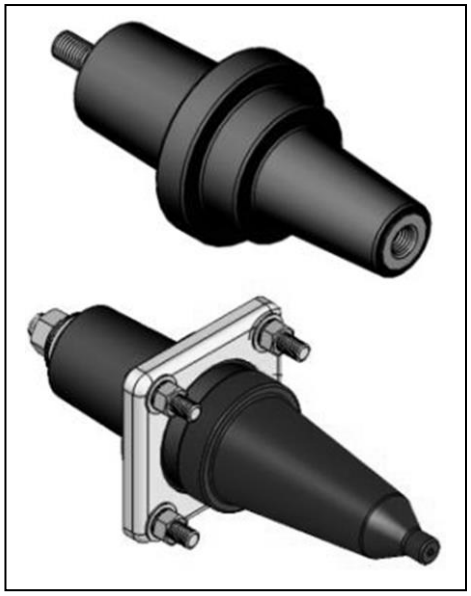

Figure 33: Integral Bushing

10.4 Elbow connector

The elbow connector is a load-operated connector for 15 kV, 25 kV either 35 kV and for 200 A and 600 A.

The elbow type connector provides an interface between the dry wire of the power line medium voltage and the transformer to connect and disconnect it with the energized line using the appropriate tool.

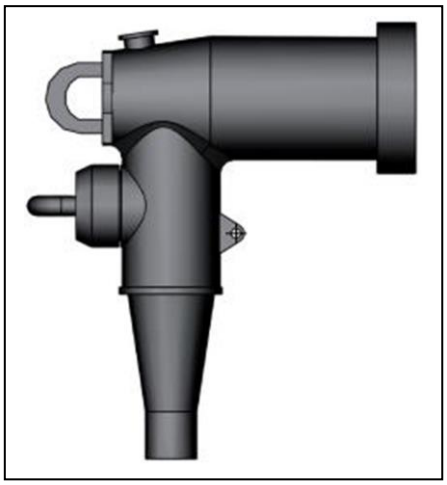

Figure 34: Elbow connector

➢ **Elbow connector installation**

- Remove the protective cover from the insert bushing.
- Using a clean, dry cloth, remove any debris from the bushing insert and elbow.
- Evenly apply silicone lubricant (included) to the bushing insert.
- Locate the elbow connector on the bushing insert and push it in until it is fully seated in the bushing insert.

Note: In annex A, the connection of the dry cable to the elbow is illustrated.

10.5 Parking hub

Allows to electrically and mechanically insulate a conductor of medium voltage spliced into an elbow and temporarily or permanently installed over it.

The parking hub is used especially when carrying out installation or maintenance work.

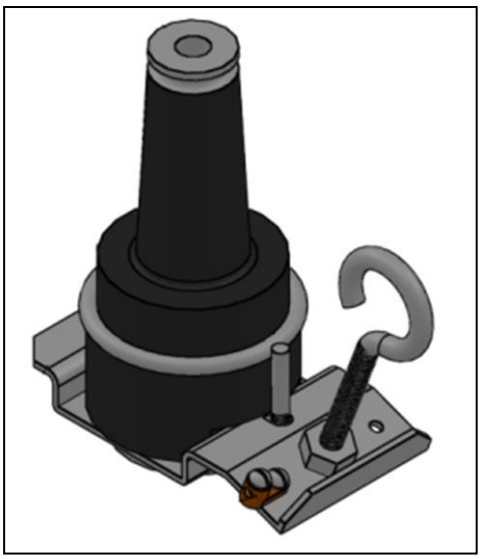

Figure 35: Parking hub

10.6 Display adapter

It is used for easy and safe grounding in underground medium voltage installations (dry wire).

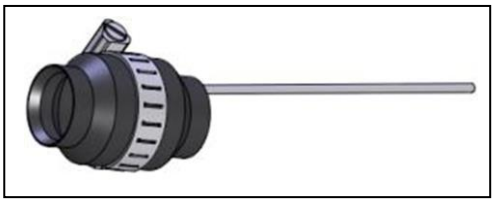

Figure 36: Display adapter

10.7 Loadbreak junction (junction box)

Load-break splices are used on pad-mounted apparatus, underground vaults, and other apparatus to switch, loop, tap, or splice, and to facilitate apparatus changeovers.

Sectioning a cable run to find and isolate a cable fault is easier when a load breaking joint is used.

Figure 37: Loadbreak junction

10.8 BAY-O-NET fuse assembly

This fuse protects against overloads, secondary faults and potentially high temperatures depending on the selected fuse.

They are designed to allow the fuse to be easily field replaceable without having to access the main oil compartment.

The fuse is housed in a BAY-O-NET (fuse holder), mounted on the front of the transformer and immersed in insulating liquid.

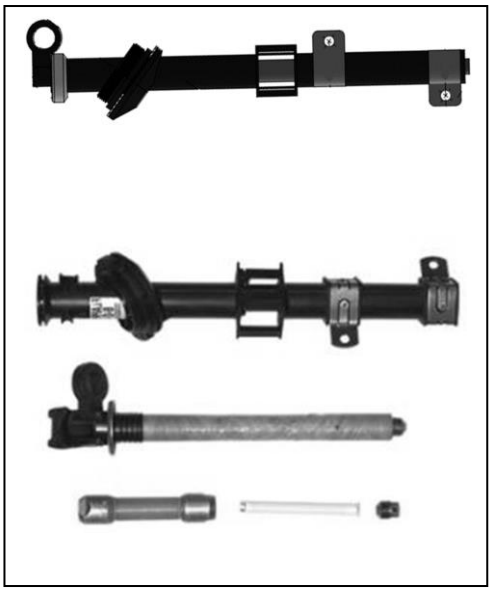

Figure 38: BAY-O-NET Fuse Assembly

10.9 Current-Limiting or Backup Fuse (ELSP)

ELSP fuse is used in transformers to protect and isolate faulty equipment. When connected in series with a low-current primary protection device, the fuse becomes one element of a two-part protection system that provides a full range of fault protection.

This two-part system provides low current protection with the replaceable expulsion fuse and adds the power limiting protection of a current limiting switch.

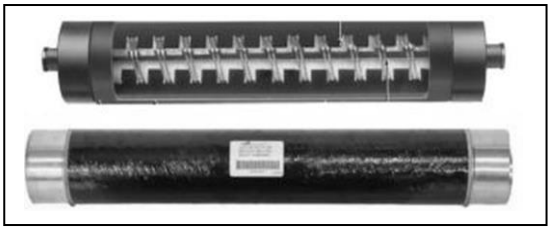

Figure 39: Current Limiting Fuse (ELSP)

10.10 LINK isolation link

This element provides additional protection during reject and switching operations when used in series with a Bay-O-Net type fuse.

Isolation links are not fusible and are not interrupting rated.

During a fault, the isolation link will melt so that the open primary circuit of a faulted transformer cannot be re-energized.

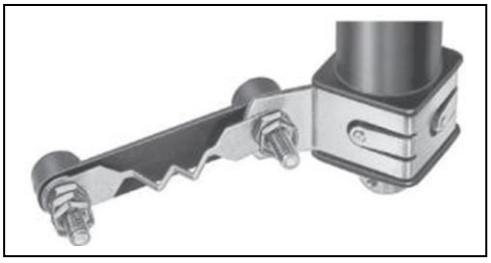

Figure 40: Isolation Link Mounted on a BAY-O-NET Fuse Assembly

10.11 Disconnector (Switch)

It is a rotary switch immersed in insulating liquid, it is operated by attaching a live line tool to the external ring and turning it to the desired position.

Two or four positions are used according to the characteristics of the product.

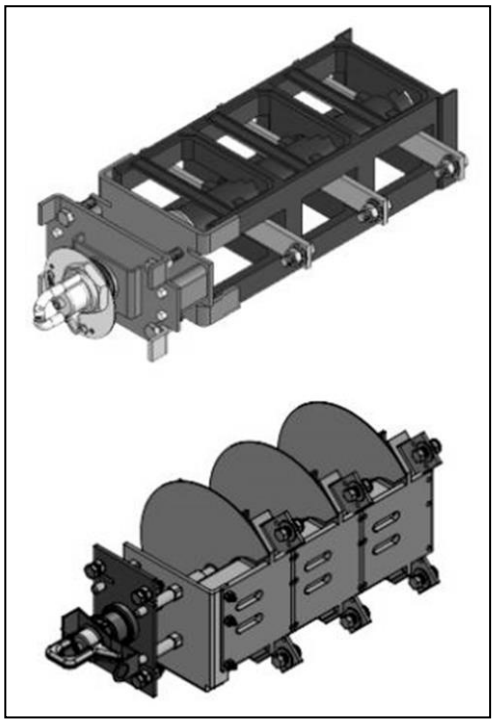

Figure 41: 2 and 4 position disconnectors (switch)

10.12 Tap changer switch

Caution: The switch has an external handle, which must be operated only with the transformer de-energized.

The switches carry out voltage regulation, which consists of compensating for voltage variations that are detected at the receiving points of a power transmission or distribution system, varying the ratio of turns in the primary winding until the required voltage is obtained in the secondary.

In this type of transformers, two types of commutators are used:

- Circulars (3 bodies)
- linear

10.12.1 Steps to operate the CIRCULAR tap changer.

- Disconnect the transformer from the power supply (MV).
- Verify the absence of voltage on the transformer by measuring the LV winding with a voltmeter.
- Ground the MV and BT terminals.
- Using a screwdriver, loosen the handle anchor screw until it protrudes from the plate.
- Rotate the handle and bring it to the needed position.
- Re-secure the handle anchor screw, until it enters the plate.
- Remove the grounding connections from the MV and LV terminals,
- Measure continuity at the MV terminals to ensure that the switch is properly engaged.
- Re-energize the transformer.
- Measure the voltage on LV, confirm that it is the needed voltage.

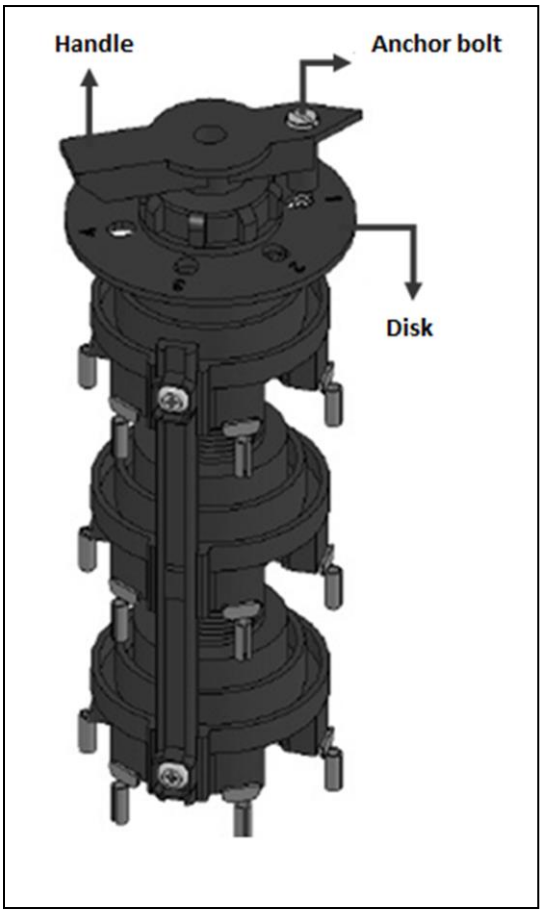

Figure 42: Circular tap changer switch

10.12.2 Steps to maneuver the LINEAR tap changer.

- Disconnect the transformer from the power source.
- Verify the absence of voltage on the transformer by measuring the LV winding with a voltmeter.
- Ground the MV and LV terminals.
- Pull the knob until it is released from the disc anchor.

- Turn the knob and bring it to the needed position.
- Make sure the knob anchors properly on the plate.
- Remove the grounding connections from the MV and LV terminals,
- Measure continuity at the MV terminals to ensure that the switch is properly engaged.
- Re-energize the transformer.
- Measure the voltage on LV, confirm that it is the needed voltage.

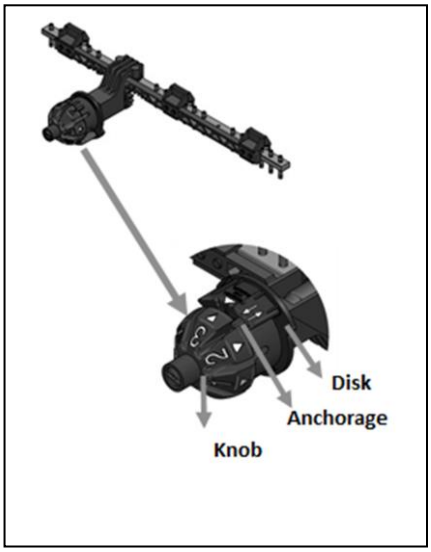

Figure 43: Linear tap changer

10.13 Name plate

It is an accessory made of a material resistant to corrosion (aluminum, stainless steel, etc.) where the most relevant information on the transformer is recorded.

The nameplate must be fixed in a visible place and its inscriptions must be legible and indelible.

Figure 44: Example nameplate

10.14 Grounding system

The product is provided with two screws with their respective accessories or copper sinkers to allow:

- The low voltage neutral point grounding to the tank is shipped connected from the factory.
- The grounding of the tank to the grounding system where the transformer will be installed.

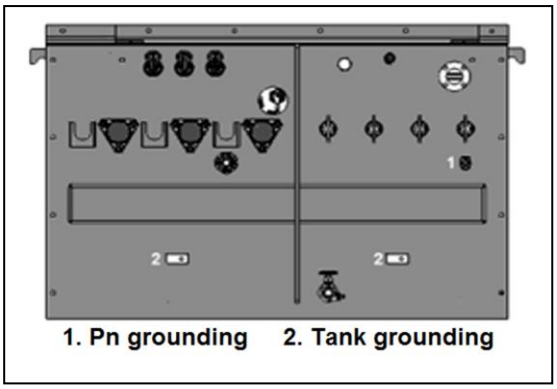

Figure 45: Grounding points

10.15 Lifting lugs

Devices for lifting or hoisting product fully assembled and filled with insulating liquid, they are located in such a way that when hooking the straps or slings they do not press against other accessories, nor against the bushings, nor do they damage the cover.

They are used for hoisting or lifting only and not for transporting.

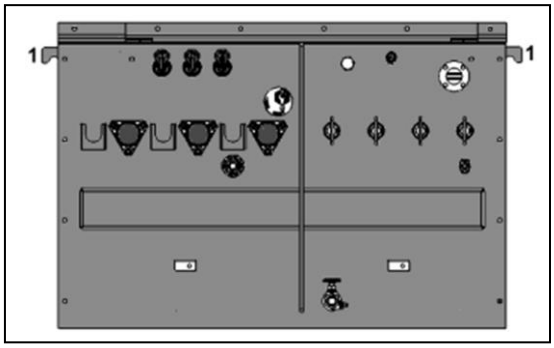

Figure 46: 1 Lifting lugs or hoist

10.16 External indication of the insulating liquid level

It is a device or meter that indicates the level of dielectric fluid in the tank of the product.

When the gauge is installed at the factory, the tank is filled to the level that corresponds to a liquid temperature of 25°C.

If the gauge indicates a "LOW" fluid level, then the product it must be de-energized and inspected to determine the cause of the low fluid level.

A low level of liquid can cause dielectric failure, overheating and reduction in the useful life of the product.

As an optional feature, the liquid level meter can be provided with one (1) or more contacts for remote signaling of levels (low or high) of dielectric fluid.

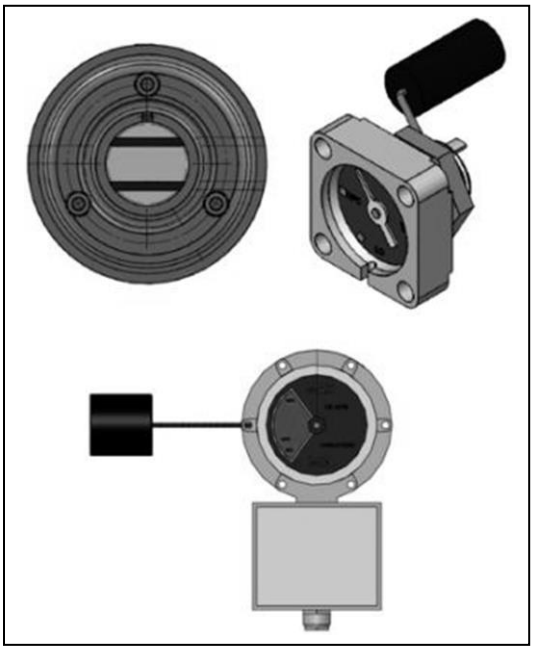

Figure 47: Insulating liquid level indicators

10.17 Temperature indicator (thermometer)

It is an instrument that measures the temperature of the liquid in degrees Celsius and includes a resettable maximum temperature indicator.

The red maximum temperature indicator can be reset by turning the magnet in the center of the faceplate towards the white indicator pointer.

The temperature gauge is mounted in a liquid-tight drywell for easy replacement.

As an optional feature, liquid temperature indicators can be provided with one (1) or more contacts to allow remote signaling of unacceptable temperatures or to control cooling fans installed on the transformer.

Figure 48: Temperature indicator

10.18 Drain valve

This device is located at the bottom of the tank, it is used for:

- Take samples of the insulating liquid in order to carry out tests.
- Drain the insulating liquid if necessary.
- Recirculate insulating liquid when performing field maintenance.

10.19 Recirculation valve

This device is located in the upper part of the tank above the level of the insulating liquid, it is used for:

- Fill the product with insulating liquid.
- Recirculate insulating liquid when performing field maintenance.
- Change the insulating liquid without taking the unit out of service product.

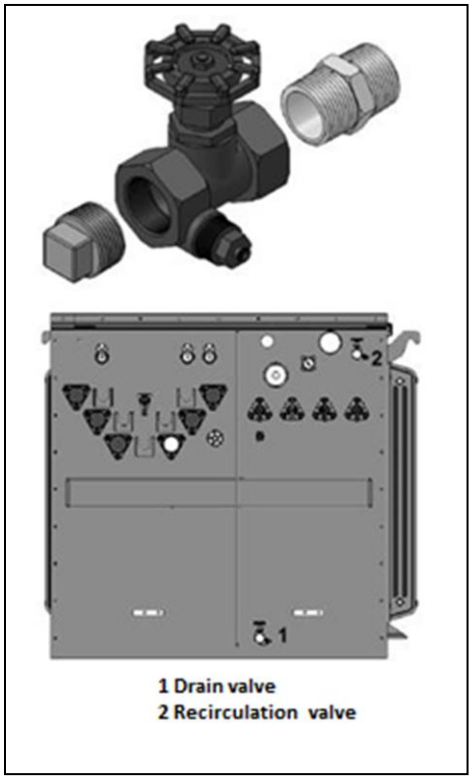

Figure 49: Drain valve

10.20 Lid lifting devices

Devices located in the lid that serve to lift the lid, are not designed to lift the product.

When the active part is attached to the lid, these devices are designed to lift the LID-ACTIVE PART assembly.

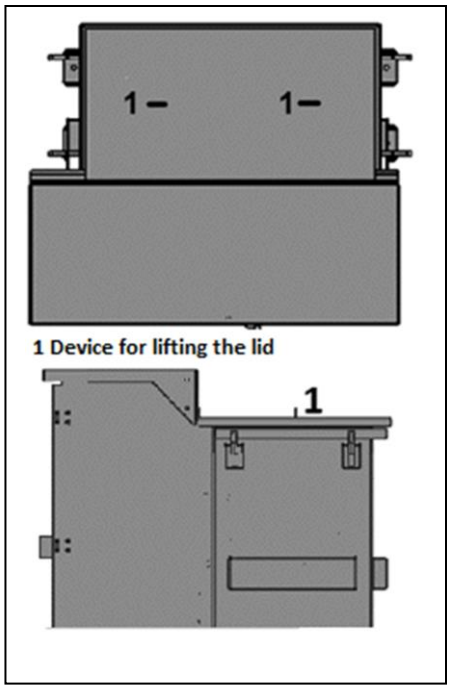

Figure 50: Devices for lifting the lid

11. Terminal marking

Terminal marking of MT and LV in this type of products, depends on the standard (NTC or ANSI).

The markings in the MV terminals are made with UPPERCASE letters and for the LV terminals they are made with LOWERCASE letters.

The marking presents some variations according to the distribution of the terminals and the addition of special accessories (lightning rod, etc); some markings are illustrated below.

11.1 NTC marking

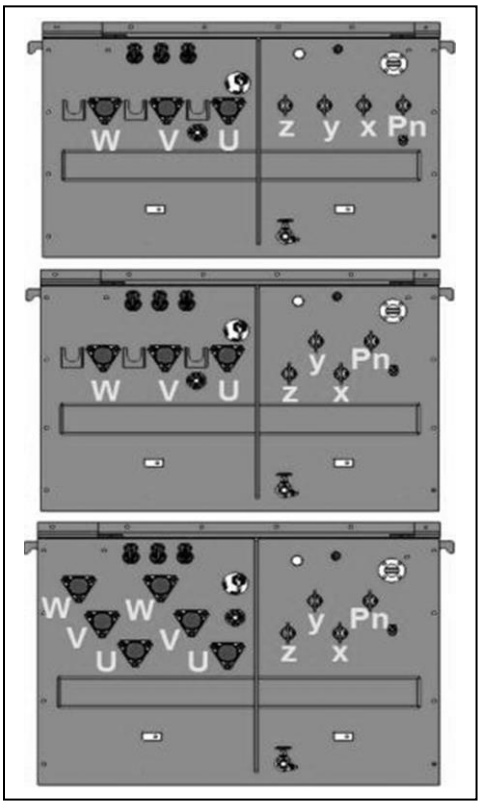

Figure 51: Examples of NTC marking on three-phase radial

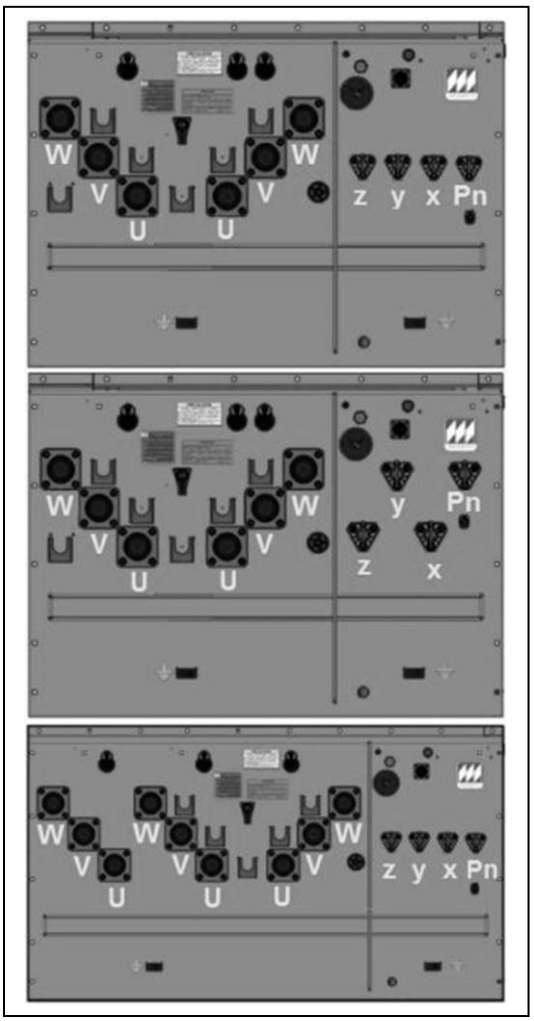

Figure 52: Examples of NTC marking on three-phase loop feed

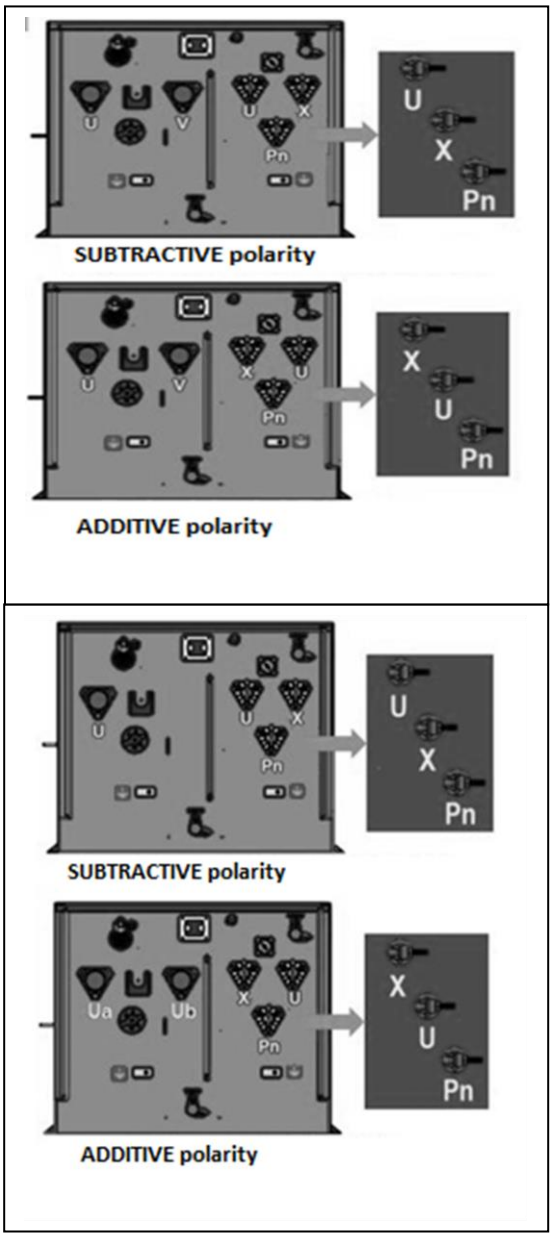

Figure 53: Examples of NTC marking on Single-phase pad mounted

11.2 ANSI marking

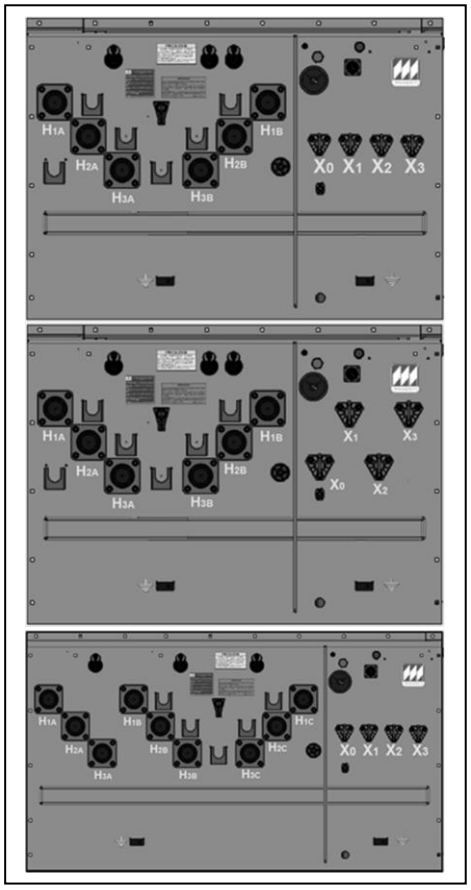

Figure 54: Examples of ANSI marking on three-phase loop feed

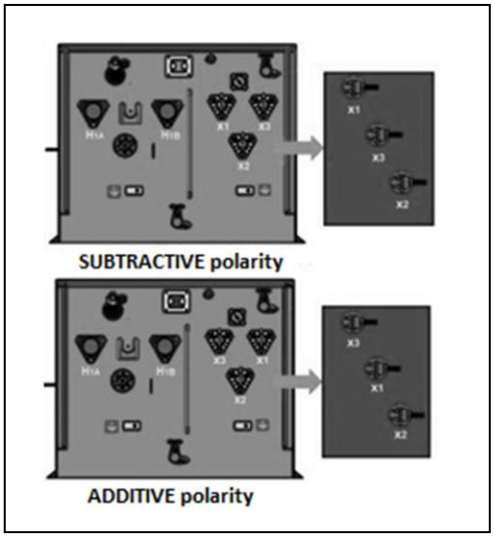

Figure 55: Examples of ANSI marking on Single Phase pad-mounted

11.3 Switchgear boxes

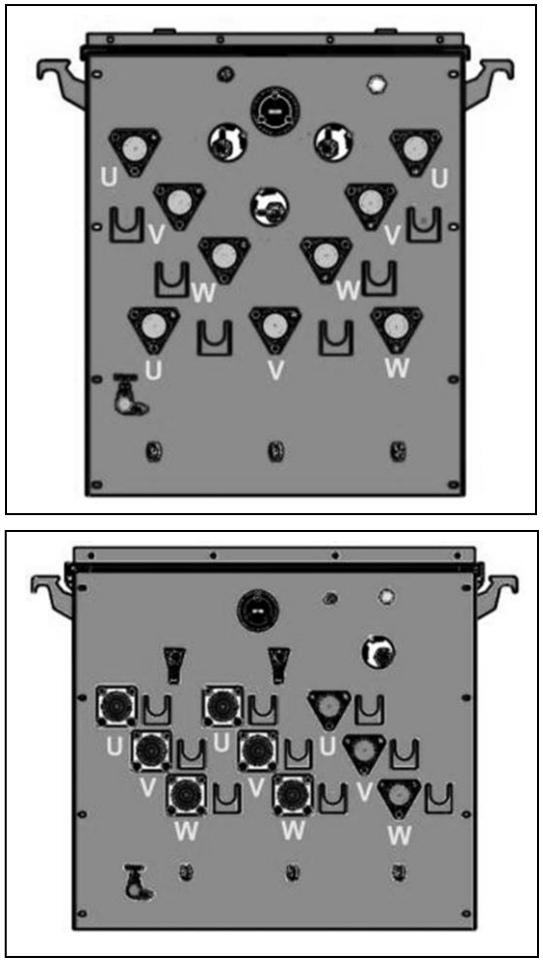

Figure 56: Example of NTC marking for Switchgear boxes

11.4 Junction boxes

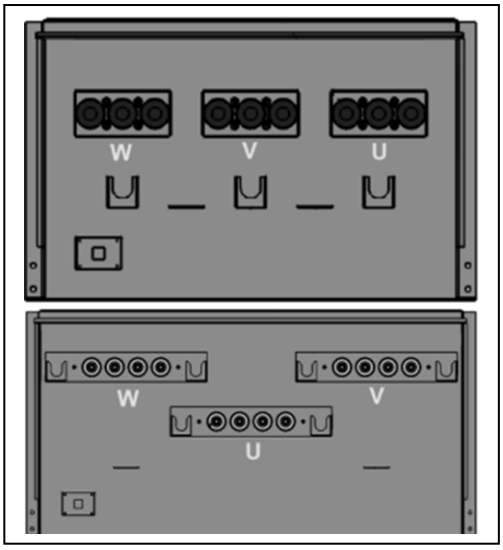

Figure 57: Example of NTC marking for junction boxes

Three-phase transformers have two other very important factors for their connection:

- Connection group
- Hourly index

11.5 Hourly index

It represents the phase angle between the vector diagram of the electromotive forces (voltages) of the primary winding and the secondary winding, when the transformer is in no-load condition.

In other words, it is the phase difference, in degrees, between the primary voltage and the secondary voltage.

The hourly index is so called because the offset is expressed according to the hours of a clock. Every hour, from 12 o'clock, represents a lag of 30º.

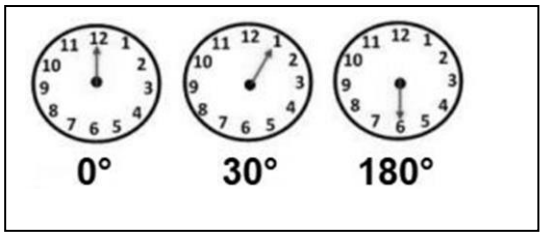

Figure 58: Hourly index examples

11.6 Connection group

It represents the type of connection for each of the windings, normally there are just the primary winding and the secondary winding.

The connection group is represented by a series of letters and a number, as follows:

- The first letter, in UPPER CASE LETTER, represents the connection of the highest voltage winding.
- The second letter, in LOWER CASE, represents the connection of the lower voltage winding.
- The number represents the phase difference, in degrees, between the primary voltage and the secondary voltage (1 = 30°).
- If a third letter (N or n) is observed in the connection group, it indicates that the star connection (Y or y) has an accessible neutral point.

Example:

Dyn5

D	Indicates the connection of the HIGHEST VOLTAGE winding (Delta or triangle)
y	Indicates the connection of the LOWER VOLTAGE winding (Star)
n	Indicates that the star connection (Y or y) has an accessible point
5	It represents the phase difference in degrees, between the primary and secondary voltage, in this case 150° (5*30°)

12. Review and tests before installation

12.1 Revision

Before installing the product, the customer must check the following:

- Remove all traces of dirt and foreign material from the medium and low voltage terminals.
- Clean the tank product.
- Check that the accessories are in good condition and properly adjusted.
- Check that there are no insulating liquid leaks.
- Check that the level of the insulating liquid is at the correct point, do it by checking the external level indicator.
- Check that the product It does not present blows or damage that could invalidate its proper functioning.
- Review the information on the nameplate and verify that it is in accordance with the requirements (power, voltages, etc.).
- Remove the base and crate (if equipped) from the product.
- Verify that the tap changer switch is well anchored and in the required voltage position.
- Make sure the low voltage neutral point is properly grounded to the tank.

12.2 Test

In order to ensure the proper functioning of the product and not affect the warranty of the equipment, the following tests must be carried out to validate its installation and energization:

12.2.1 Transformation Ratio (TTR)

This test is performed to measure the ratio of voltages or turns between two or more windings.

Also, it is a test that allows to identify:

- The connection group.
- Short circuit between turns or layers.
- Failures due to burst or open terminals.
- Damage or bad operation of the commutator.
- Wrong or broken connections.

Depending on the equipment used, the test is performed as follows:

- **Analog or crank TTR**

With this equipment, the ratio of the transformer under test is compared with a reference transformer (internal to the equipment) whose ratio is adjustable in small steps.

The transformer under test and the TTR are connected in parallel applying voltage to the MV windings; the LV windings, in parallel, are connected to a sensitive detector which is forced to signal zero (0) by adjusting the transformation ratio of the reference transformer (TTR). The adjusted transformation ratio of the reference transformer (TTR) is then equal to the transformation ratio of the transformer under test.

This procedure must be carried out in all tap positions and in all phases if it is a three-phase transformer.

Figure 59: Analog or crank TTR

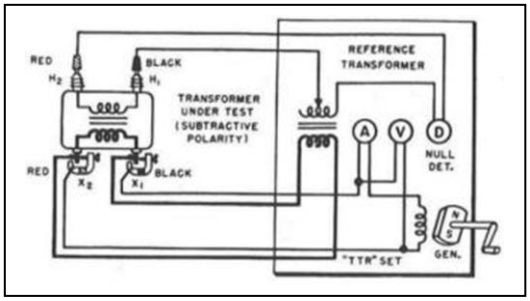

Figure 60: TTR connection to the transformer under test

- **Digital TTR**

With this equipment, an adjustable voltage is applied to the MV terminals and the output voltage of the winding corresponding to the LV is measured. The value of the transformation ratio results from the division of these voltages.

The MV and LV terminals of the metering equipment are connected to the MV and LV terminals of the transformer under test according to the marking of the corresponding phases. The equipment must be configured according to the connection group and the voltage to be applied, as standard 8V is used.

Figure 61: Digital TTR

- **Calculation of the transformation ratio**

They are carried out according to the connection group or the polarity of the transformer:

Phases	Connection type	Formula or calculations
1	Ii0 - Ii6	$RT = \frac{\text{Voltaje AT}}{\text{Voltaje BT}}$
3	Dd - Yy	$RT = \frac{\text{Voltaje AT}}{\text{Voltaje BT}}$
3	Dy	$RT = \frac{\text{Voltaje AT (L-L)}}{\text{Voltaje BT (L-L)} / \sqrt{3}}$
3	Yd	$RT = \frac{\text{Voltaje AT (L-L)} / \sqrt{3}}{\text{Voltaje BT (L-L)}}$

Figure 62: Ecuacion to calculate the transformation ratio

12.2.2 Resistance of MV and LV windings

This test is performed to ensure that the internal connections of the transformer are not loose or open.

- With an ohmmeter (multimeter) check the medium voltage connection, connect the meter between each pair of medium voltage terminals (UV, UW and VW or H1-H2, H1-H3 and H2-H3 and in single-phase UV or H1- H2).

  When the reading on the meter has stabilized, compare the results obtained with the values stated in the test certificate, there should not be a variation greater than +/- 5%.

- To verify the low voltage connection, connect the meter between each pair of low voltage terminals (xy, xz, yz or x1-x2, x1-x3, x2-x3 and on single phase ux or x1-x3).

  When the reading on the meter has stabilized, compare the results obtained with the values stated in the test certificate, there should not be a variation greater than +/- 5%.

If, when carrying out the test, any of the following cases occurs, the transformer has suffered internal damage:

- When measuring the MV winding, some of the values returned are more or less double what is stated in the test certificate.
- When measuring the MV winding, the meter does not register a measurement value.
- When measuring the LV winding, the meter does not give continuity.

EXAMPLE

Results recorded in the test certificate for position 2 of the tap switch.

U-V	V-W	W-U
29.9	29.8	30.0

switch positions	Measurements (Ω) U-V	V-W	W-U
1	30,5	30,4	30,6
2	30,3	30,1	30,2
3	29,8	29,6	29,7
4	29,5	29,3	29,4
5	29,1	29,0	29,2

switch positions	Measurements (Ω) U-V	V-W	W-U
1	30,5	61,0	30,6
2	30,3	60,1	30,2
3	29,8	29,6	29,7
4	29,5	29,3	29,4
5	29,1	29,0	29,2

switch positions	Measurements (Ω) U-V	V-W	W-U
1	61,0	30,4	30,6
2	60,6	30,1	30,2
3	59,6	29,6	29,7
4	59,0	29,3	29,4
5	58,2	29,0	29,2

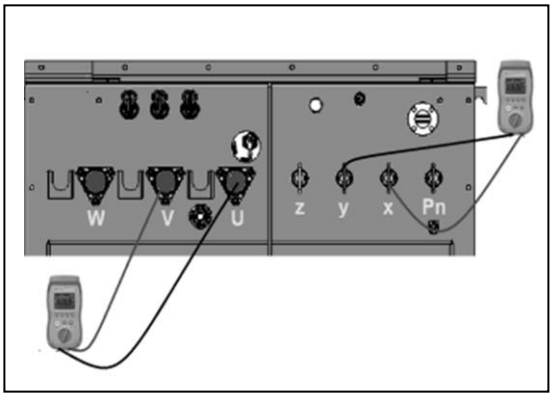

Figure 63: MV and LV continuity measurement

12.2.3 Insulation resistance

This test is carried out to have a vision of the state of the insulation in terms of contamination by the presence of water, metal particles or foreign elements suspended in the insulating liquid.

- Use a 5 kV megger with a measurement range of 50 MΩ minimum (use the same factory test voltage to minimize drift).
- Test for one (1) minute for each measurement (MV vs LV, MV vs Grd, and LV vs Grd).
- Proceed as follows:
  - Short circuit the medium voltage terminals (UVW or H1-H2-H3 or UV or H1-H2).
  - Short circuit the low voltage terminals (Pn-xyz or x0-x1-x2-x3 or Pn-ux – x2-x1-x3).

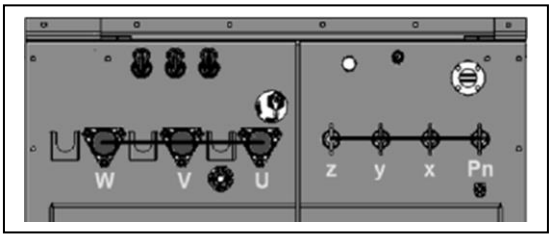

Figure 64: MV and LV terminal short circuit

- To carry out the different measurements (3) the cables are connected as follows:

  - MV-LV: Power cable (+) in MV and black cable (-) in LV, the reference cable in a ground terminal.

  - MV-Grd: Power cable (+) in MV and black cable (-) in Grd, the reference cable in LV.

  - LV-Grd: Power cable (+) in LV and black cable (-) in Grd, the reference cable in MV.

- **Results analysis**

  This test has no correspondence between the nominal power value, the transformer voltage and the insulation resistance, which is why the minimum values are left to the discretion of the manufacturer.

  To verify if the values measured at the installation site are in accordance, keep in mind the following criteria:

- Compare the results obtained against those reported by MAGNETRON SAS in the test certificate, these should be very close to or above what was measured at the factory.

- Take into account the minimum values established by MAGNETRON S.A.S. according to the class of the transformer.

Class (kV)	Minimum resistance (MΩ)
1.2	1,000
15	10,000
34.5	50,000

- Apply James Biddle's empirical formula to calculate the minimum value of insulation resistance:

$$R = \frac{CE}{\sqrt{kVA}}$$

R = Resistance at 20°C of the insulation measured in 1 min

C = Constant for measurements at 20°C

C= 1.6 for transformers in oil

C= 30 for dry transformers

KVA= rated power

E= Rated voltage in volts of the winding under test

Caution: If you have any questions or think that water has entered the product, contact MAGNETRON S.A.S.

12.2.4 Insulating liquid tests

The tests on the insulating liquid must be carried out when the product:

- During commissioning to ensure the good condition of the oil during the transformer transportation.
- When storage has been carried out outdoors or indoors for more than 2 months.
- When the insulation resistance results do not meet the criteria.
- When doubts arise due to the possible presence of water (moisture).

The tests on the insulating liquid are carried out to determine its conditions, ONLY with satisfactory results, the product can be energized.

The minimum tests required are:

12.2.4.1 Dielectric strength

This test measures the ability of the insulating liquid to withstand tension without failing.

Dielectric breakdown voltage is used to indicate the presence of contaminants such as water, dirt, or conductive particles in the fluid, one or more of which may be present in significant concentrations when low breakdown voltages are obtained.

12.2.4.2 Water content

This test method covers the measurement of water present in insulating liquids by coulometric Karl Fischer titration.

The electrical characteristics of an insulating liquid can be negatively affected by excessive water content. A high water content can make a liquid insulating may not be suitable for some electrical applications due to deterioration of properties such as dielectric breakdown voltage.

12.2.4.3 Color

This test method covers the visual determination of the color of a wide variety of petroleum products, such as lubricating oils, heating oils, diesel fuel oils, and petroleum waxes.

Using a standard light source, a liquid sample is placed in the test container and contrasts against colored glass disks ranging in value from 0.5 to 8.0. When an exact match is not found and the sample color falls between two standard colors, the larger of the two colors is reported.

12.2.4.4 Aspect (visual)

The insulating liquid should be optically clear in appearance to allow visual inspection inside the equipment tank.

When the insulating liquid presents a change in its appearance, it is an indication of oxidation, deterioration or contamination, product of the corrosion of metal or other undesirable materials.

12.2.4.5 Other tests

Other tests that can be performed on the insulating liquid are listed below:

- Interface tension
- Specific gravity
- Neutralization number
- Power factor
- PCB's content
- Viscosity
- Corrosive sulfur

These tests should be done when any of the following situations occurs:

- When the results of the minimum required tests show results that are very close to the minimum or maximum allowed.
- By request of MAGNETRON S.A.S.
- By customer request.
- At the request of an external entity.

12.2.4.6 Reference values

- Mineral oil

Method and test	Reference value
Dielectric strength ASTM D1816	≥ 35kV
water content ASTM D1533	≤ 35ppm
Color ASTM D1500	≤ 0.5
Aspect ASTM D1524	clear and bright

- Vegetable oil

Method and test	Reference value
Dielectric strength ASTM D1816 1mm gap 2mm gap	 ≥ 20kV ≥ 35kV
Water content ASTM D1533	≤ 200ppm
Color ASTM D1500	≤ 1.0
Aspect ASTM D1524	Clean and clear

Note: Any deviation from the tests and reviews listed in this section must be notified to MAGNETRON SAS in order to receive instructions on how to proceed and not put the transformer at risk. Failure to do so will result in the loss of the warranty.

12.2.5 Clarifications

The tests mentioned above are executed depending on the type of product:

- **Pad-Mounted Transformers**
  - All tests apply.
- **Switchgear boxes**
  - Continuity test,
  - insulation resistance,
  - Insulating liquid tests.
- **Junction boxes**
  - Continuity test,
  - Insulation resistance.

13. Installation and commissioning

Caution: For Colombia, the installation of the product must be done according to the requirements of the technical standards NTC-2050, NTC-3582 and the technical regulation of electrical installations (RETIE).

For other countries, the rules or laws that apply to them must be followed.

The installation of the product It is not the responsibility of MAGNETRON S.A.S. (unless otherwise specified in the contract), however, as a party interested in the product fulfilling its function in the best conditions, the following considerations must be followed:

13.1 Mounting

- The installation of the product must be carried out in an easily accessible place, where assembly and removal by crane or forklift is guaranteed, with the capacity to lift and transport the product.

- The product must be mounted on a smooth, level platform strong enough to support the weight of the product.

- The unit should not be tilted in any direction more than 1.5 degrees, a greater tilt will cause deviations in the insulating liquid level near fuses, relief devices or other accessories located near the liquid level.

Caution: Inclinations outside the specified limit, causes energized parts to be outside the level of the insulating liquid, causing a jump between them or damage to the product.

- The product must be installed in a place with sufficient area to allow the opening of the doors of the cabinet of the product, which must reach an angle greater than 135°.

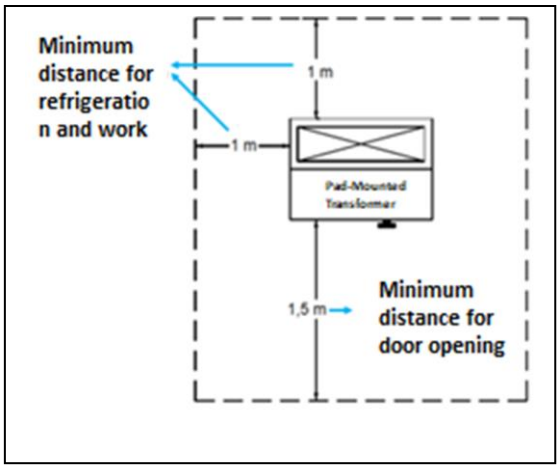

Figure 65: Minimum distances

- The product it will be solidly anchored to the concrete base or pedestal through the bolts installed for this purpose. Anchorage devices must be accessible only from inside the compartments.

- The product it cannot be installed in obligatory places of people transit or in obligatory pedestrian routes.

- If the product if it is close to areas with vehicular traffic, containment barriers must be installed.

- In the assembly of the product Minimum distances to buildings, walls, roads and trees must be guaranteed.

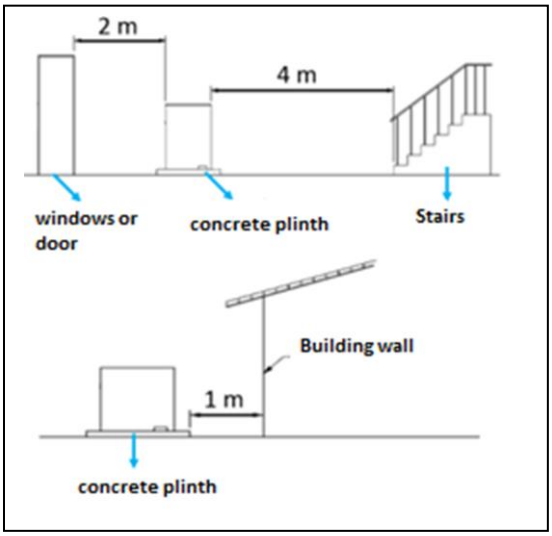

Figure 66: Safety distances

13.2 Grounding system

Ground Solidly:

- ➢ The neutral point of LV or MV,
- ➢ The tank,
- ➢ Power cables (dry wire),
- ➢ The DPS,
- ➢ The accessories that require it (type bushingsinsert, elbows, shield adapters, etc.).

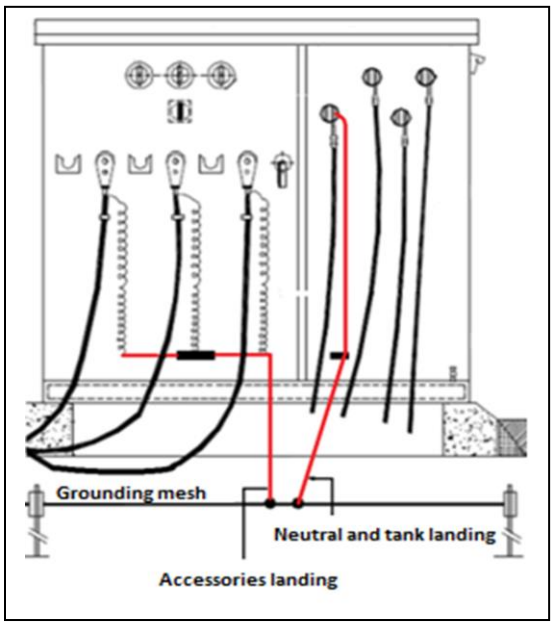

Figure 67: Grounding of the neutral point, of the tank and accessories.

- ➢ The grounding system has the following objectives:

  - Guarantee the safety of living beings,

  - Protect facilities,

  - Electromagnetic compatibility,

  - Allow protection teams to quickly clear faults,

  - Serve as a common reference to the electrical system.

- Reference values for the grounding system.

Application	Maximum values of grounding resistance (Ω)
Structures and metallic turrets of lines or networks with guard cable	20
High and extra high voltage substations	1
High voltage substations	10
Lightning protection	10
Low voltage connection neutral point	25
Networks for electronic or sensitive equipment	10

13.3 Connection sequence

- Make all connections to the grounding system.
- Make the LV connections.
- Make the connections MV.
- Make sure that the MV and LV cables are straight and are not stressed.

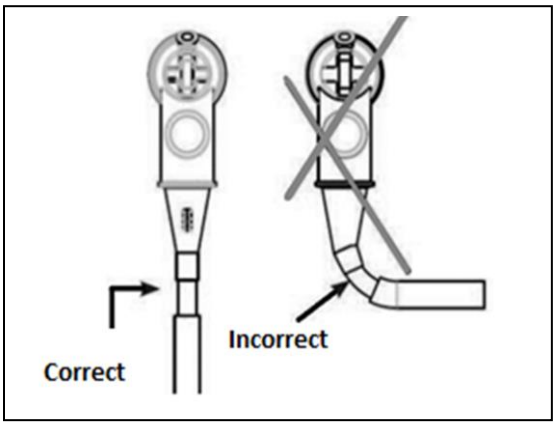

Figure 68: Proper configuration of LV

Caution: Clean and apply silicone lubricant to insert type bushings before connecting elbows.

13.4 Commissioning

Caution: To energize the product, it must be guaranteed that the tests and revisions listed in numeral 12 of this manual gave compliant results; otherwise, the energization cannot be carried out and you must contact MAGNETRON S.A.S. personnel to receive instructions.

Also, remember to use the appropriate tools and protections, such as: Pole, dielectric gloves, rubber boots, etc.

- Once the transformer is installed, leave it at rest 12 hours for transformers with mineral oil and minimum 18 hours for transformers with vegetable oil.

- In transformers provided with disconnector switch, leave them as follows:

- With two (2) positions: in the "open" position (open).

- F
  Four-position (4): In the position that leaves the transformer out of service.

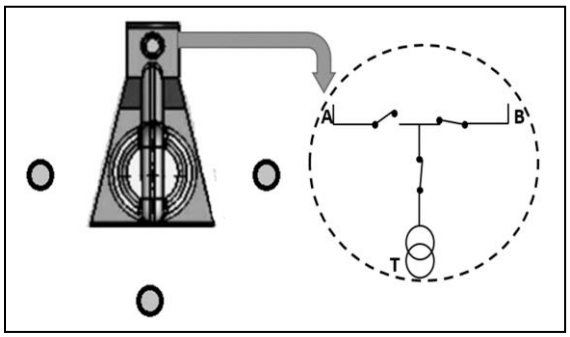

Figure 69: Transformer and loop open-de-energized

- Raise the protections of the power line, to give way to the voltage that will energize the transformer.
- Check that the supply voltage reaches the input of the transformer.

- Energize the transformer without load, for this, with the help of a pole, activate the disconnector in such a way that a three-phase energization is carried out, thus avoiding the generation of the ferroresonance phenomenon that is very harmful for the transformer:

- The two (2) positions must be in the "closed" position (close).

- The four (4) positions must be in the position that best suits the need (3 options).

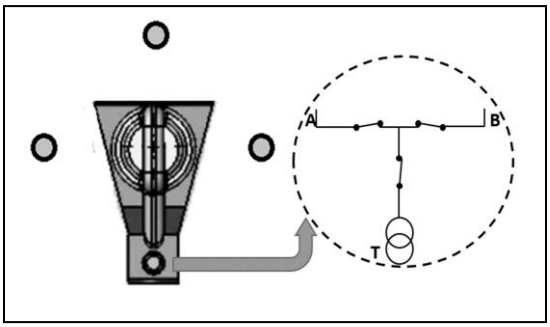

Figure 70: Transformer and loop closed-energized

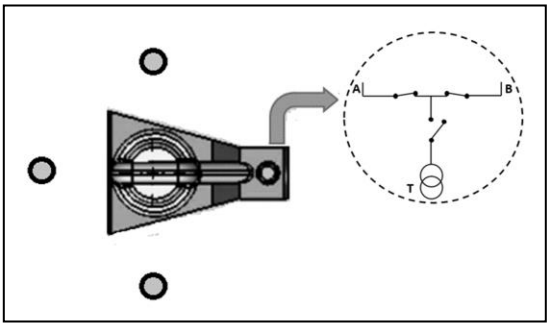

Figure 71: Transformer open-de-energized and loop closed-energized

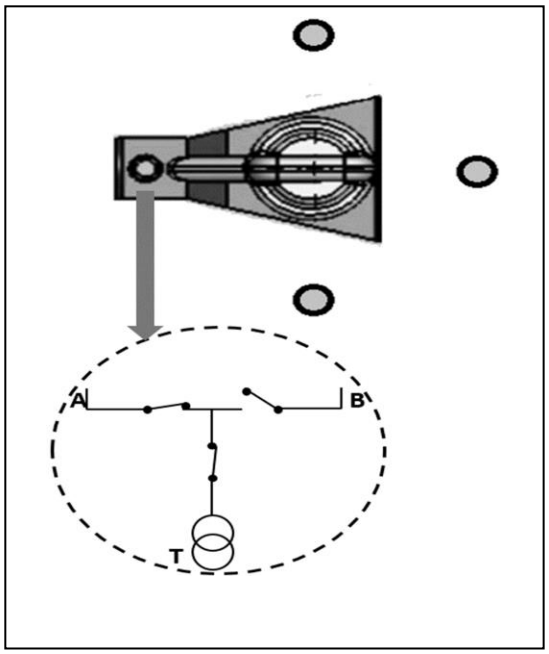

Figure 72: Transformer closed-energized and loop open-de-energized

- Make sure the product does not produce abnormal noises (humming, crackling, fluttering, etc.).
- Check the output voltage and check that is balanced and within what is required.
- Gradually install the load and keep checking the output voltage.
- Once all the load is installed, check for several hours the operation of the product.
- Keep a written record of the final installation conditions.
- Clean and order the work area.

13.4.1 Energizing transformers with vegetable oil at temperatures below -20°C

Caution: For no reason activate the mobile components (disconnector switch,tap changer, magnex, breaker, etc.) before or shortly after their energization.

The C57.12.00 standard considers initial temperatures below –20°C to be unusual service.

The energization of transformers immersed in vegetable oil at temperatures below -20°C, can follow the same sequence as transformers immersed in mineral oil, as long as the following criteria are met:

- Store transformers in such a way that no mechanical movement is required to energize them (that is: the disconnector in the CLOSED or CLOSE position, the pinned switch in the work position, etc.), taking this approach, no mechanical movement should

be required to energize the transformer.

- Do not activate mobile components (disconnector, switch, magnex, breaker, etc.) before or shortly after energizing; in extreme temperature conditions, the insulating liquid becomes more viscous (begins to thicken and, over time, may gel), hindering the mechanical maneuvering of the components and extinguishing electrical arcs more slowly.

- Energize the transformer at no load (no load), keep it that minimal18hours.

  Note: Monitor the temperature of the insulating liquid, until it is above room temperature.

- Gradually connect the load.

- After all the load is installed, observe the operation of the transformer for a while.

- To change an internally damaged component (a BAY-O-NET fuse, for example), when the ambient temperature is below -30°C, the transformer must be heated to make the vegetable oil more liquid.

For more information, you can consult the following standards:

- C57.12.93, C.57.106 and C.57.12.00.

Or, the guidelines of Cargill, supplier of vegetable oil (FR3):

- G2200S "Transformer Repair Guide".

- G2300S "Guide for storage, installation, commissioning and maintenance of transformers immersed in FR3 fluid".

- R2120 "Cold Start Recommendations for Envirotemp FR3".

13.4.2 Energizing transformers with mineral oil at temperatures below -20°C

The C57.12.00 standard considers initial temperatures below –20°C to be unusual service.

For starting temperatures below –20 °C, energize the transformer and keep it without load for a minimum of 12 hours.

Dielectric fluids can exhibit a drop in dielectric strength at lower temperatures if moisture precipitates. If, at any temperature, the density of the insulating liquid is greater than the density of water, free ice or

free water could exist in the system and cause dielectric discontinuity and possible failure.

Any extremely cold transformer should be energized with no load and then gradually increase the load.

Temporarily, localized temperatures may exceed normal values.

These transient conditions are easily tolerated by a properly designed transformer.
At very low ambient temperatures, it will take some time before external radiators are effective, but at these low temperatures, additional cooling should not be necessary.

Never energize a transformer with mineral oil with temperatures under -40 Celsius, this represents a big risk of failure, the transformer must be heated by external elements before energization.

14. Transformers with two or more months in storage

If the transformer has been stored for a period equal to or greater than two months, without being energized or since its last energization, the following procedure must be followed:

- Perform the tests described in this guide, from 12.2.1 to 12.2.5.
- If and only if the results are satisfactory, proceed as follows:
  - ✓ Energize the transformer without load, for a minimum of 12 hours for mineral oil transformers and a minimum of 18 hours for vegetable oil transformers.
  - ✓ Once the minimum energizing time without load has expired, gradually connect the load, according to the following table:
- Once all the load is installed, periodically check the operation of the transformer.
- Keep a written record of the final installation conditions.
- Clean and order the work area.

Connection of the load once the energization time has elapsed (Hours)	% Burden
6	25
12	50
18	75
24	100

If during the execution of the tests described in this guide, from numeral 12.2.1 to numeral 12.2.5, you encounter any inconvenience, take into account the recommendations in the table below:

Note: If the inconvenience(s) persist(s), do not intervene the transformer and contact MAGNETRON SAS

Inconvenience presented What to review?	Does not give transformation ratio	It does not give resistance of the windings in MV	Very low insulation resistance	short in insulation resistance	Insulating liquid does not meet the criteria
Check condition of measuring equipment and cables	X	X			
Check correct interlocking of the switch	X	X			
Check disconnector, properly closed	X	X			
Check connection of the TTR to the transformer, according to the connection group,	X				
Check the status of the BAY-O-NET fuses	X	X			
Check correct adjustment of the fuses to the BAY-O-NET	X	X			
In mesh or ring type transformers, check that the equipment is connected in the well or insert bushings according to the position of the disconnector	X	X			
Check measuring equipment, that it is in the correct range		X			
Cleaning of MV and LV Bushings			X		
test temperature			X		
Correction results by temperature			X		
Check that the neutral point is disconnected from earth				X	
If it has an electrostatic screen, it must not be grounded.				X	
Review sampling process					X
Take a second sample to validate results					X
Take sample when the no-load energization time has elapsed					X

15. Maintenance

Caution: If it is not carried out and evidence of the execution of preventive maintenance, it will cause the loss of the guarantee.

Caution: To intervene the product, disconnect the voltage sources of MV and LV in order to put it out of service.

Disconnect the MV terminals, short them and connect them to the grounding system.

Disconnect the LV terminals, short them and connect them to the grounding system.

Delimit and mark the work area.

The transformer is an electrical machine designed and manufactured to function 20 years or more under normal conditions of use.

The owner of the product is responsible for inspecting, maintaining and keeping it in good condition.

To help you for this purpose, the following must be followed instructions:

15.1 Preventive Maintenance

- During the warranty period, report all failures or eventualities to MAGNETRON S.A.S.

- Once a year, you must to inspect the product, verifying the following:

  - Condition and cleanliness of the tank.
  - Condition and cleanliness of the LV bushings.
  - Condition and cleanliness of well-type bushings, insert-type bushings, elbows, etc
  - Condition and cleanliness of the lightning rods (DPS).
  - Condition and cleanliness of the packaging.
  - Condition and cleanliness of the overpressure valve.
  - Adjustment of the connections.
  - Paint condition.
  - Confirmation that there are no leaks of the insulating liquid.
  - Operation and correct interlocking of the derivation switch.

- Condition and adjustment of the accessories for ground connections.

- Condition, cleanliness and operation of the other control or protection accessories.

- Condition of the junction boxes, verifying that they do not show signs of oxidation, presence of water or loose or misaligned terminals.

- Dielectric strength and water content tests on the insulating liquid.

- Perform gas chromatography (dissolved gas analysis - AGD) on the insulating liquid.

15.2 Corrective maintenance

- ➢ During the warranty period, report all failures or eventualities to MAGNETRON SAS, for any reason whatsoever, do not intervene on the product.

- ➢ For interventions outside the warranty period, contact MAGNETRON SAS or use a specialized transformer workshop.

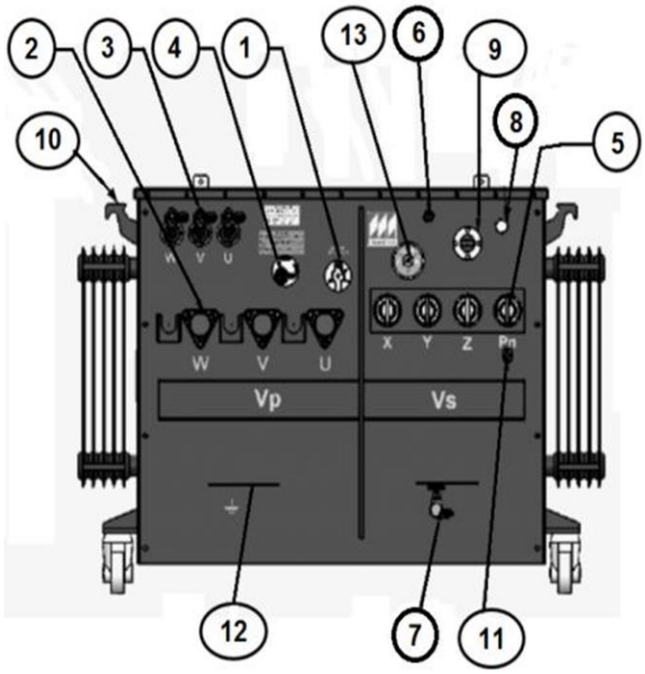

	Description
1	Switch
2	Well type bushings
3	Bayonets sets
4	ON-OFF disconnector
5	Low voltage terminals
6	Overpressure valve
7	Globe valve
8	Fill plug
9	Sight glass oil level
10	Prick ears
11	Neutral terminal grounding
12	Tank landing
13	Thermometer

Figure 73: External parts of the transformer

16. Repair

- The owner of the product is responsible for inspecting, maintaining and keeping it in good condition.

- During the warranty period, report all failures or eventualities to MAGNETRON S.A.S. for any reason whatsoever, do not repair the product without prior written authorization.

- All repairs under warranty must be done by MAGNETRON SAS or an authorized service workshop.

- For repairs outside the warranty period, contact MAGNETRON SAS or use a specialized transformer workshop.

17. Line diagrams

The diagrams illustrated below are for reference only, these may vary according to the type of product and the protections used.

17.1 Radial Pad-Mounted Transformer

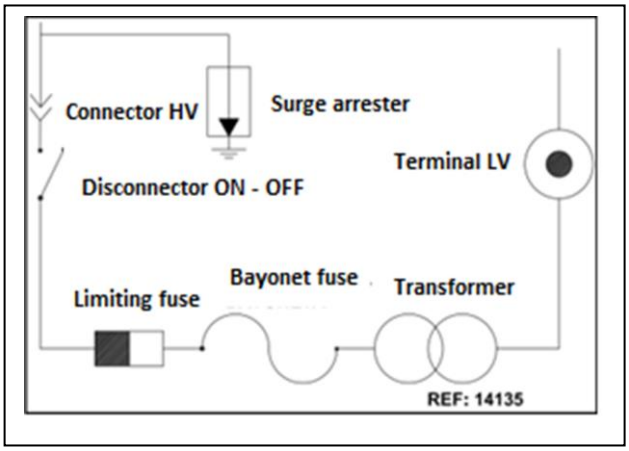

17.2 Loop feed pad-mounted transformer

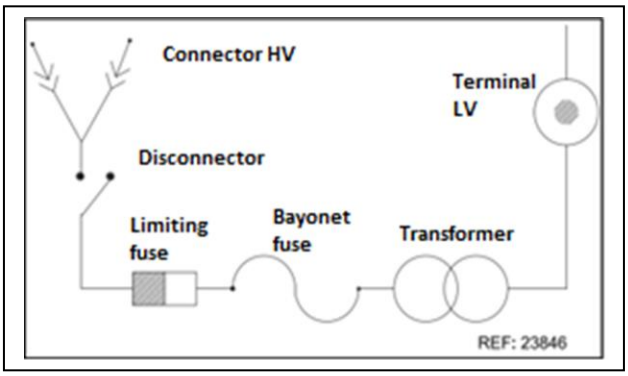

17.3 Switchgear box

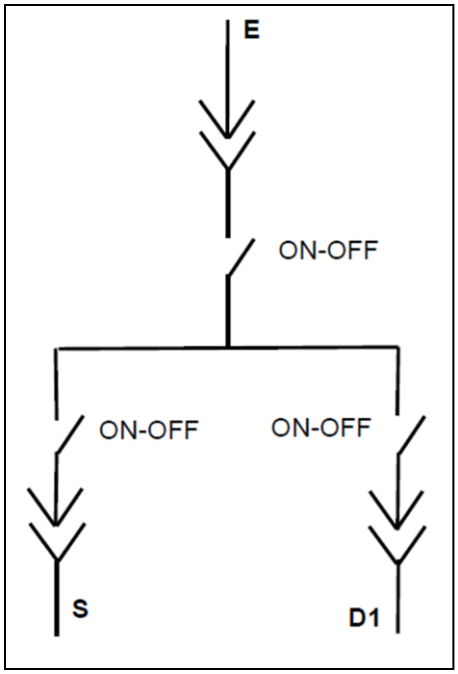

17.4 Junction box

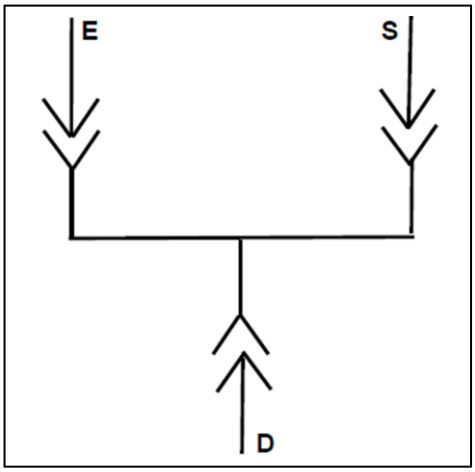

18. Problems and possible solutions

- Remember to fully comply with the numerals of “Review and tests before installation” and “Installation and commissioning” (numerals 12 and 13).
- The adjustment of the accessories must be done with a torque wrench, applying the listed torques.in numeral 19 "Torque adjustment".
- Adjustment of accessories is done externally only, for internal adjustments please contact MAGNETRON S.A.S. or with an authorized workshop.

Inconvenience presented / **What to review?**	expels the canuelas	Blow the fuses	Voltage difference between LV phases	It does not give voltage output in LV	Insulating liquid stain on the VSP	Insulating liquid stain on accessories
Connection of the transformer to the MV line	X			X		
lightning rod state	X					
Lightning rod characteristics	X					
energize no load	X	X				
Check condition of fuses		X				
Check that the fuses are correct (amperage)		X				
Correct landing of the transformer (tank)		X	X			
Correct landing of the Pn			X			
Check wiring connection settings			X	X		
Clean and monitor if persists					X	X
Check tightening torque (externally)					X	X
Check input voltage				X		
Check input voltage		X				
Correct anchoring of the commutator				X		
Test the transformer	X			X		

Inconvenience presented What to review?	Does not give transformation ratio	It does not give resistance of the windings in MV	Very low insulation resistance	short in insulation resistance	Insulating liquid does not meet the criteria
Check condition of measuring equipment and cables	X	X			
Check correct interlocking of the switch	X	X			
Check disconnector, properly closed	X	X			
Check connection of the TTR to the transformer, according to the connection group,	X				
Check the status of the BAY-O-NET fuses	X	X			
Check correct adjustment of the fuses to the BAY-O-NET	X	X			
In mesh or ring type transformers, check that the equipment is connected in the well or insert bushings according to the position of the disconnector	X	X			
Check measuring equipment, that it is in the correct range		X			
Cleaning of MV and LV bushings			X		
Test temperature			X		
Correction results by temperature			X		
Check that the neutral point is disconnected from earth				X	
If it has an electrostatic screen, it must not be grounded.				X	
Review sampling process					X
Take a second sample to validate results					X
Take sample when the no-load energization time has elapsed					X

19. Tightening torques

The different adjustments that are made in the external accessories of the transformer, should be to do following the recommendations of the suppliers regarding torques and sequence of adjustment. The most relevant are listed below:

19.1 Screws in general

Torque (lbf * ft)						
Iron				Stainless steel		
Diameter	Grade 2	Grade 5	Grade 8	Diameter	A304	A316
1/4	5,5	8	12	1/4	6	7
5/16	11	17	25	5/16	11	12
3/8	20	31	44	3/8	20	21
7/16	32	49	70	7/16	31	33
1/2	49	75	107	1/2	43	45
9/16	70	109	154	9/16	56	59
5/8	97	150	212	5/8	92	96
3/4	173	266	376	3/4	127	131
7/8	166	429	606	7/8	194	202
1	250	644	909	1	286	299
1-1/8	354	794	1287	1-1/8	413	432
1-1/4	500	1120	1875	1-1/4	523	546
1-3/8	655	1469	2382	1-1/2	888	930
1-1/2	870	1950	3161			

Note: The tightening torques in the table correspond only to the screws, when used to hold accessories (porcelain, polymers, etc.) the tightening torque is defined by the material.

19.2 Lid-Tank screws adjustment

Screws		
Torque (lbf * ft)		
Diameter	80%	100%
5/16"	14	18
7/16"	32	40

19.3 MV and LV terminals

Product	lbf * ft	Image
MT spider nut	70	
BT spider nut	29	
BT aluminum nut	35	
Stud adjustment to connect MT	18	
Anchor adjustment 7 mm to 11.9 mm	13	
Anchor adjustment 12 mm to 16 mm	15	
Anchor adjustment 19 mm to 32 mm	19	
Bolt adjustment for external clamping flanges	12	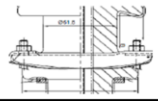

19.4 Tap changer switch

Accessory	lbf . ft	Image
SWITCH nut	8 to 9	
Linear commutator nut	11	 

19.5 Overpressure valves

Overpressure valve	Tightening torque	Image
1/4"	20 to 25	
1/2"	54	
3/4"	83	
1-1/4"	121	

19.6 Well bushing

Accessory	Lbf.ft	Image
Well bushing fixing to the tank stainless screw	7,5	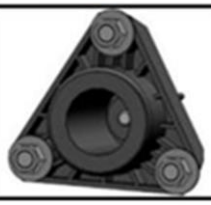

19.7 ON-OFF three-pole disconnector 300 A

Accessory	Lbf.ft	Image
ON-OFF three-pole disconnector 300 A Detail A - Nut Detail B-C - Iron 3/8"	 15 20	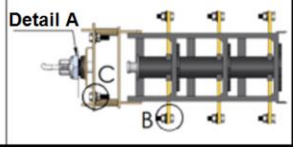

19.8 4P 200 A three-pole disconnector

Accesory	Lbf.ft	Image
Detail A - Nut Detail B - Drive knob bolt Detail C-D -Fe 3/8"	50 4 20	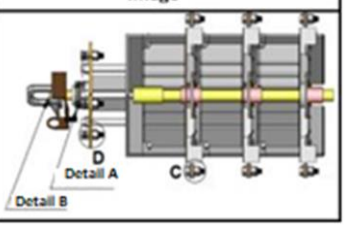

19.9 BAY-O-NET Fuse Holder

Accesory	Lbf.ft	Image
Detail A-Nut	15 - 18	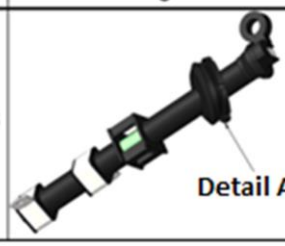

19.10 Integral bushing

Accessory	Lbf.ft	Imagen
Detail A - Stainless steel 7/16"	4 - 8	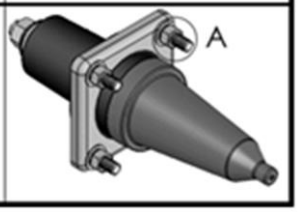

20. Environment

MAGNETRON SAS is a company committed to the environment, for this reason, our products meet all the requirements related to the topic.

MAGNETRON SAS has identified potential risks that may cause harmful environmental effects on the environment.

MAGNETRON S.A.S. itself provides its clients with a series of environmental advice, in order to prevent and minimize contamination throughout the life cycle of the transformer.

The environmental councils are consigned in the environmental management plan, made up of 5 environmental management programs.

If you want to know more about environmental programs, contact MAGNETRON S.A.S.

The final receiver of the transformer must comply with current legislation and that applies to it.

In the event of leakage of the insulating liquid, it must be collected in a container, avoid it falling on the ground.

- If insulating liquid has been spilled on the floor, clean it up with an absorbent material (example: sawdust).
- The insulating liquid that has been collected and the media used for cleaning must be treated as toxic and hazardous waste.
- Waste should not be mixed.

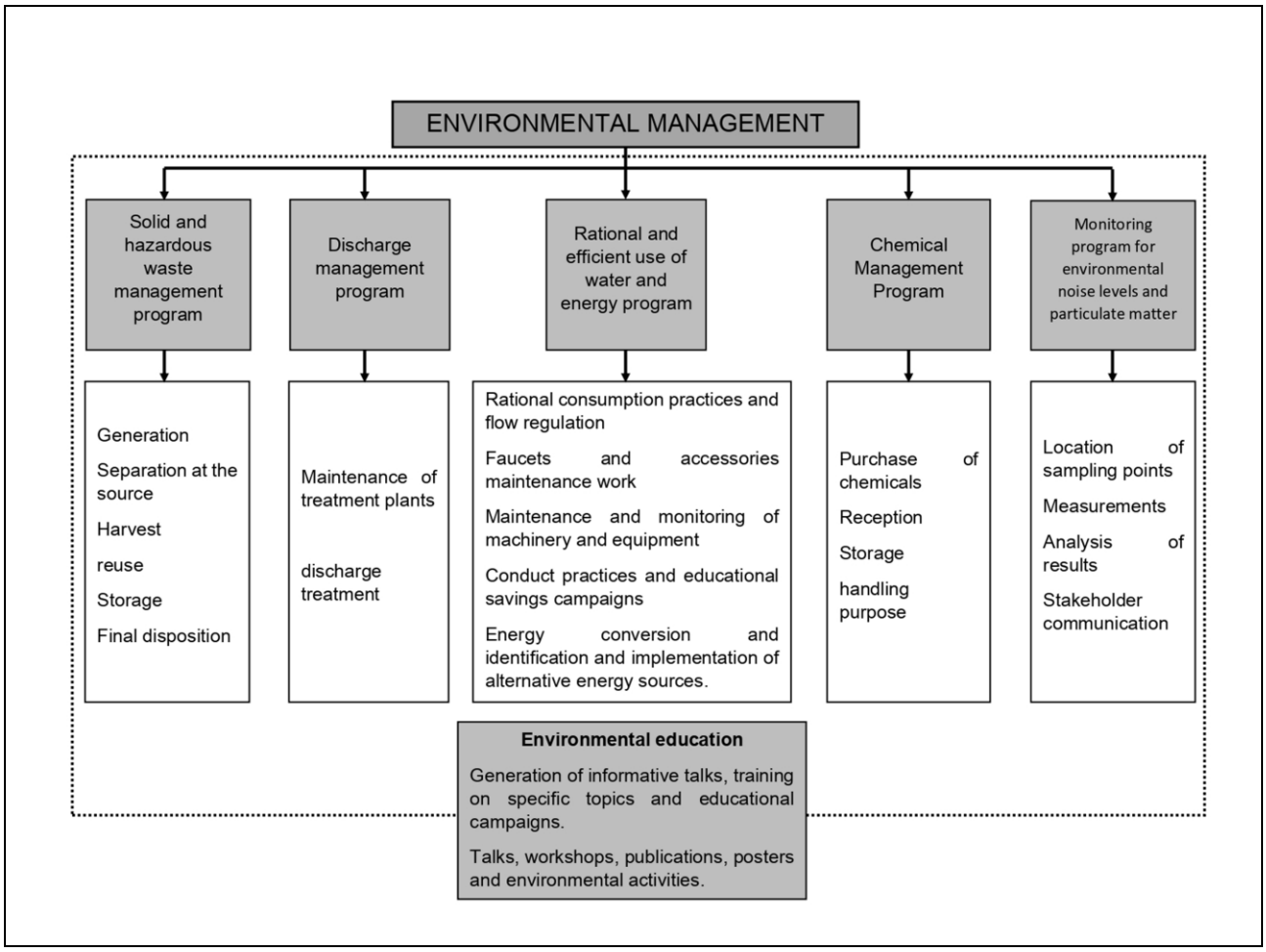

Figure 74: MAGNETRON SAS Environmental Management Plan

21. Warranty Terms and Conditions

Refer to the guarantee certificate that is delivered with each product; behind it, there are the instructions that must be followed to make the guarantee effective and the conditions that invalidate it.

22. Annex A "Dry cable connection to the elbow type connector"

Caution: The dry wire should have plenty of slack to facilitate connection and disconnection of the elbow connector on the transformer bushing insert.

The dry wire should fit straight into the elbow connector.

- Dry wire parts

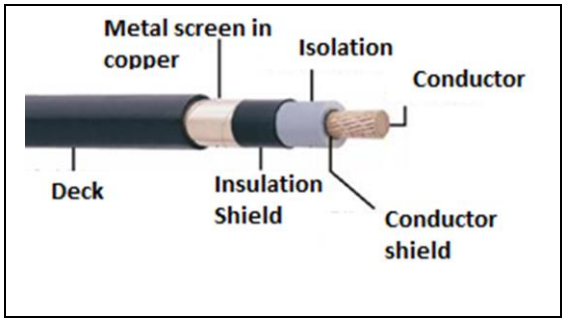

- Measure 292mm from the end of the cable down.
- Remove the cable jacket to expose the copper metal shield.
- Unroll the copper metal shade and measure 203mm to 216mm from bottom to top.
- Square off excess wire.
- Measure 54mm from the top of the wire down.
- Remove all layers of dry wire to expose the conductor, be careful not to cut or shear it.
- Clean the exposed connector with a wire brush.

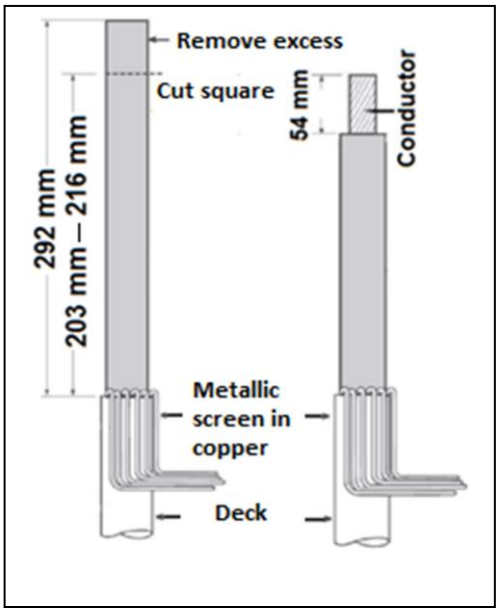

- Locate the bi-metal connector on the conductor, making sure the threaded hole in the connector faces up.

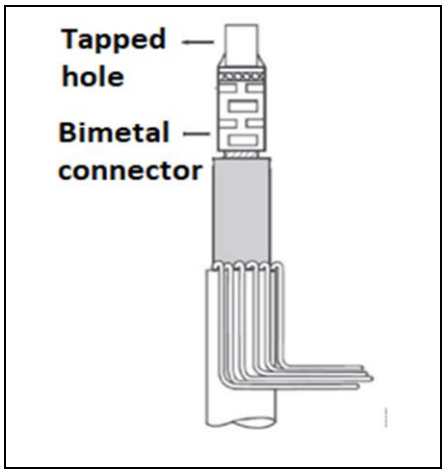

- Punch out the connector just below the line of intersection of the two metals and make several crimps,

rotate the connector so that the crimps do not overlap.

- File off any resulting roughness.
- Measure from the top of the bi-metal connector 175mm and remove the insulation shield, be careful not to cut or shear the insulation.
- Chamfer the insulation approximately 3mm to facilitate installation of the elbow.

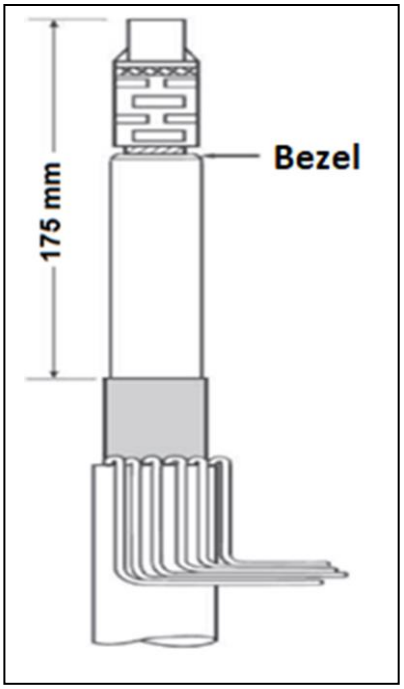

- Clean the insulation with a lint-free cloth and apply a thin layer of the lubricant supplied with the elbow.
- Clean and lubricate the cable entry in the elbow.
  - Position the elbow on the dry wire and push it in with a twisting motion until the threaded eye of the bi-metal connector lines up properly.
- Install the contact stem to the bi-metal connector.

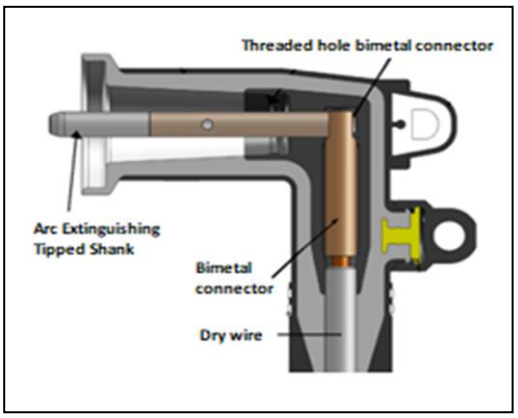

- Screw the stem in by hand a few turns, finish tightening the stem with the supplied wrench until it is permanently deformed.

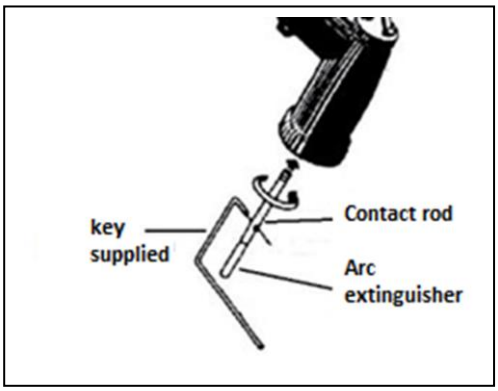

Note: If you use another tool to torque, be sure not to exceed 8 lbf.ft.

- Using bare copper wire (+/- 14 gauge), connect to the copper metal shield of the dry wire and ground to tank ground.

The connections must be tight to ensure a good landing.

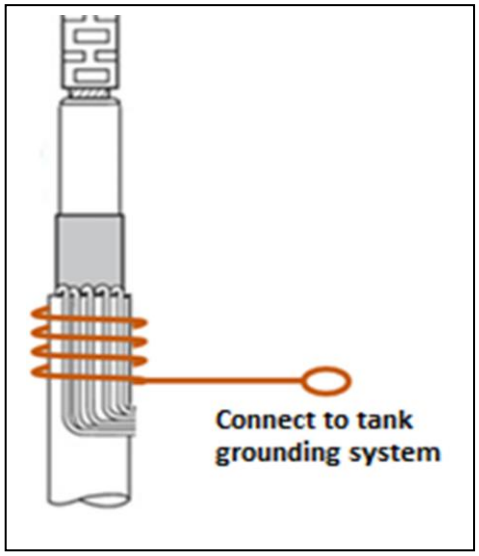

- Locate the elbow connector on the bushing insert and push it in until it is fully seated in the bushing insert.

.

23. Contact Us

For more information or to provide technical support, contact us through the following means:

	servicioexterno.magnetron.com.co
	customerservice.magnetron.com.co
	(57) 3187117456 (57) 3157100 extension 109